N/SST

MCR-86-2601
NAS8-36108

Volume IV

(NASA-CR-179293) ORBITER TRANSFER VEHICLE CONCEPT DEFINITION AND SYSTEM ANALYSIS STUDY. VOLUME 4: SPACE STATION ACCOMMODATIONS. REVISION 1 Final Report, Jul. 1984 - Oct. 1985 (Martin Marietta

N86-18609

Unclas
G3/16 0092617

Space Station Accommodations

Orbital Transfer Vehicle Concept Definition And System Analysis Study

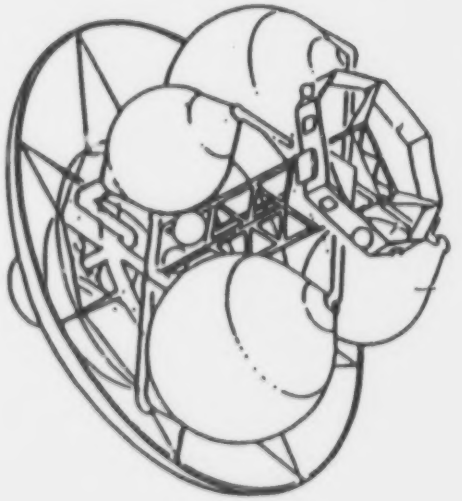

MARTIN MARIETTA

694

MCR-86-2601
NAS8-36108

ORBITAL TRANSFER VEHICLE
CONCEPT DEFINITION AND SYSTEM ANALYSIS STUDY

VOLUME IV
SPACE STATION ACCOMMODATIONS

August 1985
Rev 1 - July 1987

Prepared By: Roger M. Randall
Roger M. Randall
Accommodations Manager

Approved By: J.T. Keeley
J.T. Keeley
Program Manager
Initial Phase

MARTIN MARIETTA
ASTRONAUTICS GROUP
P O. BOX 179
DENVER, COLORADO 80201

TABLE OF CONTENTS

PARAGRAPH NO.	SUBJECT	PAGE NO.
1.0	***INTRODUCTION***	*1*
1.1	BACKGROUND	2
1.2	KEY OBJECTIVES SUMMARY	4
1.3	STUDY METHODOLOGY	6
1.4	REFERENCE DATA USED IN THIS VOLUME	10
2.0	***PAST STUDY ASSESSMENTS, STUDIES, AND ANALYSES***	*13*
2.1	OVERVIEW	14
2.2	SPACE-BASED AND GROUND-BASED OTV ACCOMMODATION GROUPINGS	16
2.3	RELATED TRADE STUDIES AND ANALYSES	18
2.4	OTV SPACE-BASING DESIGN CRITERIA AND GUIDELINES	20
3.0	***SPACE-BASED OTV ACCOMMODATIONS***	*35*
3.1	SPACE-BASED OTV FAMILY	36
3.1.1	CRYOGENIC SPACE-BASED OTV FAMILY	38
3.1.2	STORABLE SPACE-BASED OTV FAMILY	50
3.1.3	SPACE-BASED OTV MISSION MODEL - REVISION 8	58
3.2	SPACE-BASED OTV REQUIREMENTS DEFINITION	65
3.2.1	OVERVIEW	66
3.2.2	KEY SPACE-BASED OTV REQUIREMENTS ASSESSMENTS	70

TABLE OF CONTENTS (CONTINUED)

PARAGRAPH NO.	SUBJECT	PAGE NO.
3.2.3	KEY SPACE STATION BASIC ACCOMMODATION PARAMETERS	72
3.2.4	SPACE STATION / SPACE-BASED OTV FUNCTIONAL FLOW ANALYSES	75
3.2.4.1	FUNCTIONAL FLOW ANALYSES PREREQUISITES	76
3.2.4.1.1	SPACE-BASED OTV MISSION OPERATIONS ANALYSIS	78
3.2.4.1.2	PROPELLANT TANK FARM ANALYSIS SUMMARY	82
3.2.4.1.3	HANGAR AND BERTHING REQUIREMENTS	84
3.2.4.1.4	SPACE STATION CREW LIMITATIONS	110
3.2.4.1.5	PRESSURIZED MAINTENANCE AREA REQUIREMENTS	112
3.2.4.2	SPACE STATION / SPACE-BASED OTV FUNCTIONAL FLOW OVERVIEW	114
3.2.5	SPACE STATION / SPACE-BASED OTV FUNCTIONAL REQUIREMENTS	116
3.2.6	SPACE STATION / SPACE-BASED OTV ACCOMMODATION REQUIREMENTS	146
3.2.7	SPACE-BASED OTV COMPOSITE TIMELINES	150
3.2.8	SPACE-BASED OTV SERVICE AND MAINTENANCE TIMELINES	154
3.3	SPACE-BASED OTV ACCOMMODATIONS DESIGN AND OPTIMIZATION	159
3.3.1	OVERVIEW	160
3.3.2	HANGAR CONFIGURATION	164
3.3.3	BERTHING CONFIGURATION	168
3.3.4	PROPELLANT TANK FARM CONFIGURATION	172

TABLE OF CONTENTS (CONTINUED)

PARAGRAPH NO.	SUBJECT	PAGE NO.
3.3.5	LAUNCH CONFIGURATION	174
3.3.6	RETRIEVAL CONFIGURATION	176
3.3.7	SPACE CRANE END EFFECTOR	178
3.3.8	SERVICING CONFIGURATION	180
3.3.9	SUPPORT CREW ACCOMMODATIONS	194
3.3.10	FLEET ACCOMMODATION ADDITIONS	196
3.3.11	SPACE-BASED OTV ACCOMMODATION TECHNOLOGY REQUIREMENTS	200
3.3.12	RECOMMENDED SPACE-BASED OTV DESIGN CHANGES	202
4.0	***GROUND-BASED OTV ACCOMMODATIONS AT SPACE STATION***	223
4.1	OVERVIEW	224
4.2	GROUND-BASED OTV GROUND RULES	226
4.3	RESULTANT GROUND-BASED OTV MISSION MODEL	228
4.4	GROUND-BASED OTV BASIC ACCOMMODATION PARAMETERS	234
4.5	GROUND-BASED OTV FUNCTIONAL FLOW OVERVIEW	236
4.6	GROUND-BASED OTV/SPACE STATION FUNCTIONAL REQUIREMENTS	238
4.7	GROUND-BASED OTV/SPACE STATION ACCOMMODATION REQUIREMENTS	250
4.8	GROUND-BASED OTV PRE AND POST MISSION PROCESSING TIMELINES	254
4.9	GROUND-BASED OTV ACCOMMODATIONS DESIGN AND OPTIMIZATION	258

TABLE OF CONTENTS (CONTINUED)

PARAGRAPH NO.	SUBJECT	PAGE NO.
4.10	GROUND-BASED OTV FLEET ACCOMMODATION ADDITIONS	260
4.11	GROUND-BASED OTV ACCOMMODATION TECHNOLOGY REQUIREMENTS	262
4.12	RECOMMENDED GROUND-BASED OTV DESIGN CHANGES	264
5.0	***OTV ACCOMMODATIONS ASSESSMENT***	**269**
5.1	OVERVIEW	270
5.2	INITIAL SPACE STATION REQUIREMENTS	272
5.2.1	MASS CONSIDERATIONS	274
5.2.2	HANGAR SCAR	276
5.2.3	PROPELLANT TANK FARM	278
5.2.4	SPACE CRANE PROVISIONS	280
5.2.5	INTERFACE PROVISIONS	282
5.2.6	POWER CONSUMPTION REQUIREMENTS	286
5.2.7	VOLUMETRIC REQUIREMENTS	304
5.3	POTENTIAL SPACE STATION EVOLUTIONARY IMPLEMENTATION PLAN	308
5.3.1	SPACE-BASED OTV	311
5.3.1.1	SPACE-BASED OTV ACCOMMODATION ELEMENTS LISTING	312
5.3.1.2	SPACE-BASED OTV HANGAR EVOLUTIONARY REQUIREMENTS	322
5.3.1.3	SPACE-BASED OTV ACCOMMODATIONS TIME PHASING BY ELEMENT	326

TABLE OF CONTENTS (CONTINUED)

PARAGRAPH NO.	SUBJECT	PAGE NO.
5.3.1.4	SPACE-BASED OTV SUPPORT CREW SKILL REQUIREMENTS	328
5.3.1.5	SPACE-BASED OTV SUPPORT CREW REQUIREMENTS	330
5.3.2	GROUND-BASED OTV (OPERATING IN CONJUNCTION WITH SPACE STATION	335
5.3.2.1	GROUND-BASED OTV ACCOMMODATION ELEMENTS LISTING	336
5.3.2.2	GROUND-BASED OTV ACCOMMODATIONS TIME PHASING BY ELEMENT	340
5.3.2.3	GROUND-BASED OTV SUPPORT CREW SKILL REQUIREMENTS	342
5.3.2.4	GROUND-BASED OTV SUPPORT CREW REQUIREMENTS	344
6.0	***SPACE STATION / OTV ACCOMMODATION CONCERNS***	***349***
7.0	***SPACE STATION / OTV ACCOMMODATIONS RECOMMENDATIONS***	***355***
8.0	***SPACE STATION / ACCOMMODATIONS TRADE STUDIES AND ANALYSES***	***371***
8.1	OTV PROPELLANT STORAGE	372
8.1.1	CRYOGENIC PROPELLANT STORAGE	374
8.1.2	STORABLE PROPELLANT STORAGE	396
8.1.3	SUPPORTING DATA	408
8.2	PROPELLANT TANK FARM LOCATION	415
8.2.1	CRYOGENIC PROPELLANT TANK FARM LOCATION	416
8.2.2	STORABLE PROPELLANT TANK FARM LOCATION	418
8.2.3	SUPPORTING DATA	420
8.3	MISCELLANEOUS ANALYSES	428

This final report, Volume IV - Space Station Accommodations was prepared by Martin Marietta Denver Aerospace for NASA/MSFC in accordance with contract NAS8-36108. The study was conducted under the direction of NASA OTV Study Manager, Mr. Donal R, Saxton, during the period from July 1984 to October 1985. This final report is arranged into nine volumes.

FOREWARD

Volume I	Executive Summary	
Volume II	Book 1	Mission and System Requirements
	Book 2	OTV Concept Definition
	Book 3	Subsystem Trade Studies
	Book 4	Operations
Volume III	System and Program Trades	
Volume IV	Space Station Accommodations	
Volume V	Work Breakdown Structure and Dictionary	
Volume VI	Cost Estimates	
Volume VII	Integrated Technology Development Plan	
Volume VIII	Environmental Analysis	
Volume IX	OTV Study Extension Results	

The following personnel were key contributors during the July 1984 to October 1985 period in the identified disciplines.

Study Manager	J.T. Keeley	(March 1985-October 1985)
	R.B. Demoret	(July 1984-February 1985)
Project Managers	G.J. Dickman	(Cryogenic Systems)
	A.E. Inman	(Storable Systems)
Task Leads	J.H. Nelson	(Missions, Trades & Programmatics)
	T.L. Stanker	(Design)
	J.C. Mitchell	(Operations)
	R.M. Randall	(Accommodations)

This volume is submitted in horizontal format with facing page explanations to facilitate direct use by the Space Station Program and contractors for the OTV accommodations functional requirements and the supporting analyses, sequences, and recommendations in the main volume and separate appendices.

1.0 INTRODUCTION

1.1 BACKGROUND

In July 1984, Martin Marietta, Denver Aerospace Division, was awarded a Phase A Contract from NASA/MSFC (Contract No. NAS8-36108) for an Orbital Transfer Vehicle Concept Definition and System Analysis Study. The contract period-of-performance was 15 months, from July 1984 to October 1985.

The study was to focus on use of the Aft Cargo Carrier (ACC) as the primary mode of OTV delivery to orbit since previous Phase A Studies had already addressed the use of the Shuttle Cargo Bay as the primary delivery mode.

The study was partially funded by the Space Station Program so as to identify and assess the OTV accommodations needed at Space Station. Task 5 of the contract, Space Station Accommodations Concept Definition, was designated as the primary task directed toward this effort. This volume (Volume IV) of the Final Study Report provides that information.

BACKGROUND

- ORBITAL TRANSFER VEHICLE CONCEPT DEFINITION AND SYSTEM ANALYSIS STUDY
  - PHASE A CONTRACT (NAS8-36108)
  - PERIOD OF PERFORMANCE - *15 MONTHS*
    - *JULY '84 / OCTOBER '85*
  - FOCUSES ON *AFT CARGO CARRIER (ACC) DELIVERY* OF *OTV* TO *ORBIT*
  - PARTIALLY FUNDED BY *SPACE STATION* PROGRAM TO ADDRESS *OTV / SPACE STATION ACCOMMODATION REQUIREMENTS*

1.2 KEY OBJECTIVES SUMMARY

The facing page chart provides a brief summary of the key objectives of Task 5, Space Station Accommodations Concept Definition. Space Station accommodations were to be assessed and defined for each potential candidate Space-Based OTV concept and for the composite OTV fleet. To accomplish this, the functional and physical interactions between each OTV concept and the Space Station had to be defined. Then, conceptual accommodation designs were to be prepared and optimized for approach and configuration. Initial Space Station requirements had to be identified, including the ability to accommodate and support evolution to maturity, and then a time-phasing of accommodations prepared showing that evolution.

In the process of developing physical and functional interactions, operational requirements had to be defined. From these definitions, the crew complement and skills were defined, together with associated timelines. In that the crew complement is subject to limitations, the operational requirements derivation was biased toward automation wherever possible.

For each potential candidate Ground-Based OTV concept, operating in conjunction with Space Station, the above listed process was repeated.

We believe that we have accomplished all of these objectives in sufficient depth to provide the Space Station Program with a firm data base with which to proceed, and this Final Study Report is the culmination of all our investigations and conclusions.

TASK 5 KEY OBJECTIVES SUMMARY

- SPACE STATION ACCOMMODATIONS FOR OTV/OTV FLEET
  - *SPACE STATION / OTV FUNCTIONAL AND PHYSICAL INTERACTIONS*
  - *OPTIMUM ACCOMMODATIONS DESIGN APPROACH AND CONFIGURATION*
  - *INITIAL SPACE STATION REQUIREMENTS*
    - ACCOMMODATE AND SUPPORT EVOLUTION
  - *POTENTIAL SPACE STATION EVOLUTIONARY IMPLEMENTATION PLAN*
  - *DEFINE OPERATIONAL REQUIREMENTS*
    - REFURBISH
    - STORE
    - MAINTAIN
    - SERVICE
    - RETRIEVE
    - RECONFIGURE
    - LAUNCH
    - INTEGRATE PAYLOAD(S)
    - REFUEL
    - CHECKOUT
  - *CREW SIZE, SKILLS , AND TIMELINES (EMPHASIZE AUTOMATION)*
  - *GROUND-BASED OTV OPERATING IN CONJUNCTION WITH SPACE STATION*

MARTIN MARIETTA

1.3 STUDY METHODOLOGY

An overview of the Task 5 Space Station Accommodations Concept Definition Study Methodology, as related to calendar time, is shown on the facing chart. Subtask 5.1, Past Study Assessments, was initiated and completed during September, 1984, and resulted in the publication of space-basing design criteria and guidelines subsequently used during the design process performed under Task 2 and 3.

The time interval between Subtasks 5.1 and 5.2 was intentionally established to allow screening and scope-down of candidate OTV concepts during Tasks 2 and 3. This was deemed necessary to allow sufficient depth of analysis within Task 5.

Subtask 5.3, Ground-Based OTV Accommodations, was initiated after the start of Subtask 5.2, Space-Based OTV Accommodations, so as to allow synergism between the two subtasks.

Originally schedules to be completed in May, Subtask 5.4, Accommodations Assessment was extended to the end of June, 1985, to allow revisions resulting from the new Revision 8 Mission Model received in late May.

TASK 5: SPACE STATION ACCOMMODATIONS CONCEPT DEFINITION STUDY METHODOLOGY

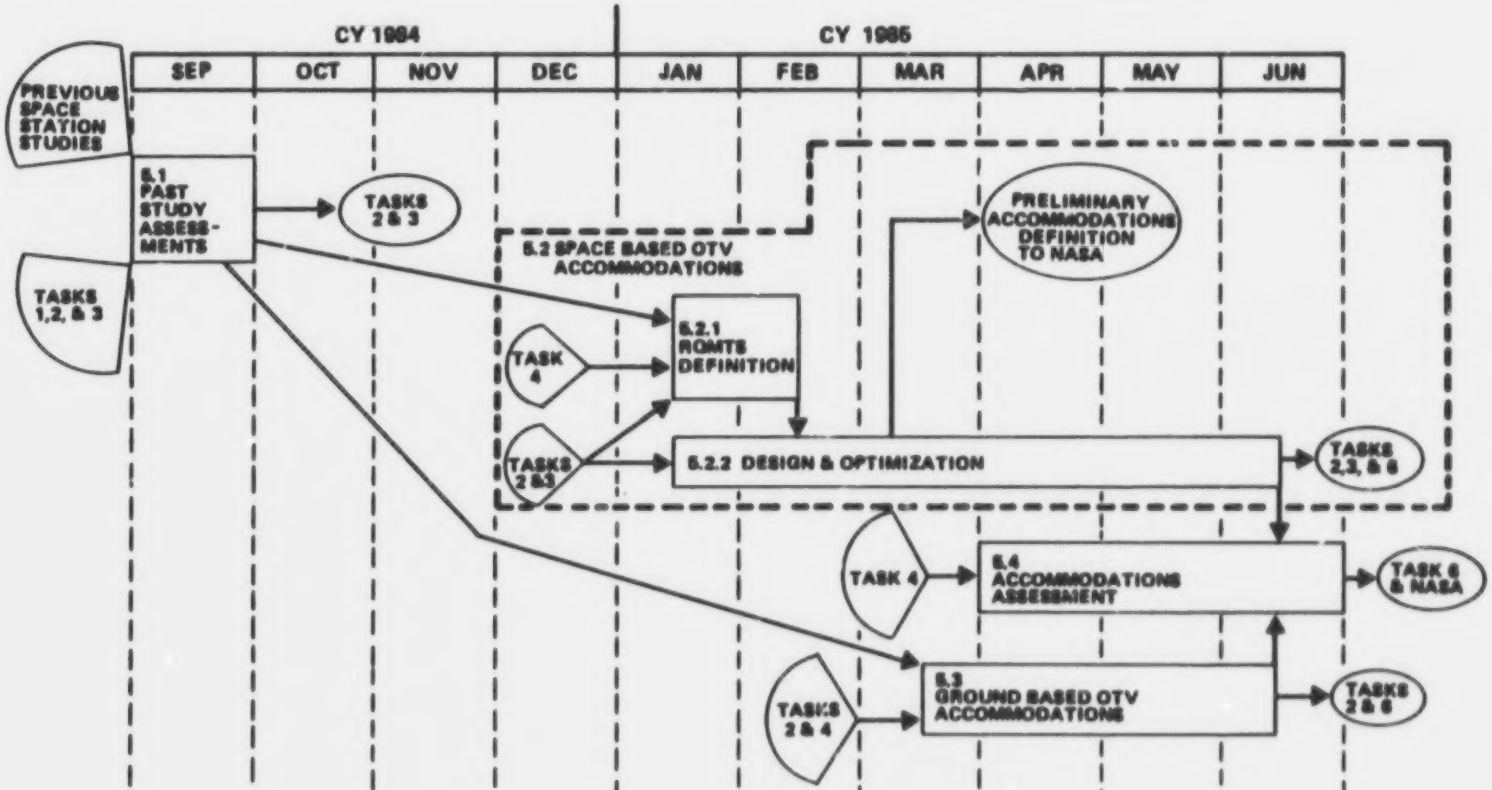

MARTIN MARIETTA

1.3 STUDY METHODOLOGY - TASK 5 SUMMARY

In summary of the inputs, outputs, and activities of Task 5, under Task 5.1, Space-Based and Ground-Based OTV design criteria and guidelines were developed for use by Tasks 2 and 3. Under Tasks 5.2.1 and 5.3, each potential OTV candidate concept was subjected to a rigorous requirements definition. Because of the depth of this definition and the subsequence accommodations designs, the number of candidate OTV concepts was minimized.

Under Tasks 5.2.2 and 5.3, accommodations were conceptually designed and optimized. The final effort, performed under Task 5.4, identified initial Space Station requirements, and prepared a Potential Space Station Evolutionary Implementation Plan.

TASK 5 SUMMARY

- TASK 5.1
  - *SBOTV AND GBOTV DESIGN CRITERIA AND GUIDELINES DEVELOPED FOR TASKS 2 AND 3*
- TASKS 5.2.1 AND 5.3
  - *EACH OTV CANDIDATE CONCEPT SUBJECTED TO DETAILED REQUIREMENTS DEFINITION*
  - *CANDIDATE QUANTITY MINIMIZED TO ALLOW IN-DEPTH ANALYSIS*
- TASKS 5.2.2 AND 5.3
  - *ACCOMMODATIONS CONCEPTUAL DESIGN AND OPTIMIZATION FOR EACH OTV CANDIDATE CONCEPT*
- TASK 5.4
  - *INITIAL SPACE STATION REQUIREMENTS*
  - *POTENTIAL SPACE STATION EVOLUTIONARY IMPLEMENTATION PLAN*

1.4 REFERENCE DATA USED IN THIS VOLUME

Presented below is a listing of applicable reports referenced in this volume.

REFERENCE DATA USED IN THIS VOLUME

Report No. GER 14774, Materials Technology Advancement Program For Expandable Manned Space Structures, Goodyear Aerospace Corporation, Contract NAS1-9112, August 1970.

Report No. GER 14779, Summary Report, Materials Technology, Advancement Program for Expandable Manned Space Structures, Goodyear Aerospace Corporation, Contract NAS1-9112, August 1970.

Report No. GEC-SP-83-052, Definition of Technology Development Missions for Early Space Station, General Dynamics Convair Division, Contract NAS8-3509, June 1983.

Report No. LMSC/D931647, Satellite Services Handbook/Interface Guidelines, Lockheed Missiles and Space Corporation, Contract NAS9-15800, December 1983.

Space Operations Study, McDonnell Douglas Technical Services Company, Contract NAS10-10385, May 1983.

MMC Internal Technical Memorandum TM C.5.1.0.0-01, Space Based Accommodations-OTV Interface Design Criteria and Guidelines, 28 September 1984

MMC Internal Technical Memorandum TM C.5.1.0.0-02, OTV Space Basing Design Criteria and Guidelines, 28 September 1984.

MMC Internal Technical Memorandum TM I.5.2.0.0-01, Liquid Hydrogen Storage Methods is Space, January 1985.

Report No. SOC-SE-03-01, Space Station Needs, Attributes, and Architectural Options Study - Final Report, Martin Marietta Denver Aerospace, Contract NASW-3686, April 1983.

Report No. FR-18946, RL10 Derivative Engine Family for OTV, Pratt & Whitney, 31 May 1985.

Report No. BC 83-291, Rocketdyne's Cryogenic OTV Engine, Undated.

PRECEDING PAGE BLANK NOT FILMED

2.0 PAST STUDY ASSESSMENTS, STUDIES, AND ANALYSES

2.1 PAST STUDY ASSESSMENTS, STUDIES, AND ANALYSES OVERVIEW

Under Study Methodology, Paragraph 1.3, this effort was identified as Task 5.1. Space Station Needs, Attributes and Architectural Options, Final Reports prepared by Boeing, General Dynamics, Grumman, Lockheed, Martin Marietta, Rockwell, McDonnell Douglas, and TRW were reviewed and became the data base reference for OTV accommodations. The mission requirements of Vol. II, Book 1 and the reference concepts of Vol. II, Book 2 were used to screen this data base both to determine applicability and identify missing areas of interest. Trade studies and analyses were then conducted to supplement the data base where needed. Using the resultant data base, design criteria and guidelines were derived and provided to Tasks 2 and 3 for guidance. These same criteria and guidelines were also provided to Tasks 5.2.1 and 5.3 for use in evaluating the resultant Task 2 and 3 OTV design concepts.

TASK 5.1 PAST STUDY ASSESSMENTS, STUDIES, AND ANALYSES OVERVIEW

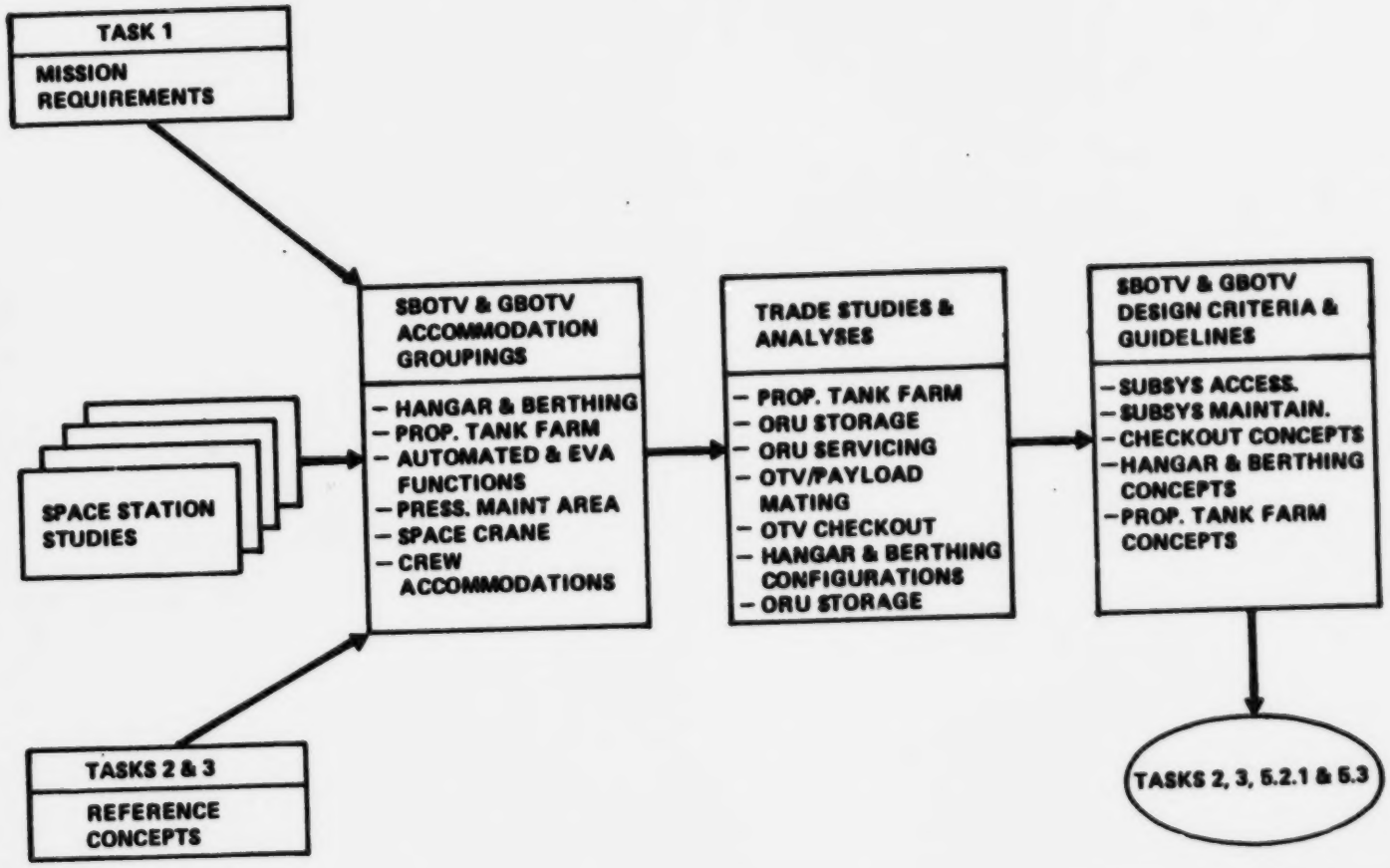

MARTIN MARIETTA

SBOTV ACCOMMODATIONS GROUPINGS

- HANGAR & BERTHING CONFIGURATIONS
- PROPELLANT TANK FARM CONFIGURATIONS
- AUTOMATED & EVA FUNCTIONS
- PRESSURIZED MAINTENANCE AREA REQUIREMENTS
- SPACE CRANE CONFIGURATIONS & REQUIREMENTS
- CREW ACCOMMODATIONS REQUIREMENTS

PRECEDING PAGE BLANK NOT FILMED

2.3 RELATED TRADE STUDIES AND ANALYSES

Using the screened accommodation configurations extracted from previous Space Station studies, we identified those areas that needed further investigation and definition. Those areas are shown on the facing page chart, and are discussed in Section 8.0, Space Station Accommodations Trade Studies and Analyses, of this report.

RELATED TRADE STUDIES AND ANALYSES

- PROPELLANT TANK FARM TRADES
  - *PROPELLANT STORAGE*
  - *LOCATION*
- OTV / PAYLOAD MATING ANALYSIS
- HANGAR AND BERTHING CONFIGURATION ANALYSIS
- ORU STORAGE ANALYSIS
- ORU SERVICING ANALYSIS

DESIGN CRITERIA AND GUIDELINES

- SPACE CRANE TWO POINT PICKUP ALONG LONGITUDINAL AXIS (*OTV/PAYLOAD LAUNCH & RETRIEVAL*)
- BERTHING INTERFACE (*CRADLES*)
- UMBILICALS
  - ***PROPELLANT*** - MAIN AND RCS
  - ***PRESSURANT*** - ONE PER TYPE
  - ***FUEL CELL*** - BY PRODUCT REMOVAL
  - ***POWER***
  - ***SIGNAL***

PRECEDING PAGE BLANK NOT FILMED

We concluded that the OTV design must be EVA-compatible, primarily as a contingency backup to automation/robotics malfunction or failure, and developed a corresponding set of design criteria and guidelines.

Normally, we envision EVA servicing to be accomplished with the astronaut restrained outside the OTV envelope, in either a Portable Foot Restraint (PFR) or a Manipulator Foot Restraint (MFR), requiring only OTV ORU handholds and accessibility. However, for those EVA activities which must be performed within the OTV envelope, footholds and foot and body restraints must also be provided.

OTV appendages too large or cumbersome for an EVA astronaut to manipulate or control must provide a grapple fixture interface to enable an RMS to perform this function. To minimize OTV weight, this interface will consist of an ORU scar allowing attachment of a removable grapple fixture.

While it does not appear to be a problem, our space-based design criteria and guidelines contain temperature limits for an EVA astronaut gloved hand as a caution to OTV design personnel.

Recognizing that visibility and lighting constraints will exist within the OTV servicing area, removal or replacement of an ORU should always be accomplished along a straight or slightly curved line whether it is performed by an EVA astronaut or by robotic manipulation.

DESIGN CRITERIA AND GUIDELINES (CONT.)

- **EVA INTERFACES**
  - HANDHOLDS
  - FOOTHOLDS
  - FOOT AND BODY RESTRAINTS
  - ACCESSIBILITY
- **LARGE APPENDAGE GRAPPLE FIXTURES**
  - MAIN PROPELLANT TANKS
  - AEROBRAKE
  - MAIN ENGINE(S)
- **THERMAL SURFACE TEMPERATURE LIMITS FOR EVA ASTRONAUT GLOVED HAND (*1/2 MINUTE, 1 PSI GRASPING PRESSURE*)**
  - + 275°F TO -180°F
- **ORU CHANGEOUT ALONG STRAIGHT / SLIGHTLY CURVED LINE**

When entering the OTV envelope, the EVA astronaut must have a clear access corridor to the area to-be-serviced. The facing page chart identifies those access corridor requirements, as well as gloved-hand clearance requirements to allow an EVA astronaut to perform useful work between ORUs.

Past studies have indicated that an EVA astronaut can manipulate and control a rectilinear ORU up to 40 inches by 30 inches by 20 inches. Beyond that size, not only does manipulation and control become a problem, but visibility is impaired. Our design criteria and guidelines require an ORU exceeding that size to have a grapple fixture.

OTV designers must provide a handle, preferably permanent, on each ORU at a minimum distance from the center-of-gravity to enable EVA astronaut changeout. Additionally, the handle and ORU supporting structure must withstand astronaut induced loads.

DESIGN CRITERIA AND GUIDELINES (CONT.)

- **EVA ASTRONAUT ACCESS**
  - STRAIGHT LINE TRANSLATION ACCESS
    - ***43 INCH CLEAR DIAMETER***
  - TRANSLATION DIRECTIONAL CHANGES (MORE THAN 30° IN 9 FEET)
    - ***48 INCH CLEAR DIAMETER***
  - GLOVED HAND CLEARANCE BETWEEN ORUs
    - ***10 INCHES (MINIMUM)***
    - ***19 INCHES (MAXIMUM REACH)***
- ***ORU GREATER THAN 40" X 30" X 20" REQUIRES GRAPPLE FIXTURE***
- **PERMANENT ORU EVA HANDLE AT / NEAR CG**
  - ***MINIMUM ULTIMATE LOAD OF 300 FT-LBS ANY DIRECTION***

Not only must designers consider ORU handle loads, but astronaut gloved-hand loads on handholds and handrails. For EVA servicing within the OTV envelope, personnel tether points must be provided with sufficient strength to support astronaut body loads. Designers must also consider inadvertent contact loads during EVA servicing. These loads can result from unplanned, astronaut-caused impacts during translation or servicing activities and can range from 20 to 300 pounds. Items to be considered include electrical cable harnesses, multi-layer insulation, radiators, and panel facing.

In the design and sizing of each ORU, the ability of a restrained EVA astronaut to remove, replace, or position an ORU must be taken into account The last item on the facing page chart provides hand movement constraints for an astronaut in an EMU.

DESIGN CRITERIA AND GUIDELINES (CONT.)

- **CREW INDUCED LOADS**
  - GLOVED HAND - ***100 LBS LIMIT, 300 LBS ULTIMATE ANY DIRECTION***
  - PERSONNEL TETHER POINT AND MOUNTING STRUCTURE - ***300 LBS LIMIT, 900 LBS ULTIMATE ANY DIRECTION***

- **INADVERTENT CREW CONTACT LOADS**
  - ***20 TO 300 LBS***

- **MAXIMUM CONTROL HAND MOVEMENT DISPLACEMENT SPANS FOR A RESTRAINED EVA ASTRONAUT**
  - LATERAL (SIDE - TO SIDE) = ***38 INCHES***
  - FORWARD / BACKWARD = ***14 INCHES***
  - UPWARD / DOWNWARD = ***27 INCHES***
  - ROTARY = ***-8 INCHES***

Our design criteria and guidelines also identified the preferred ORU module configuration. Shown is the typical Orbital Replacement Unit (ORU) outline for a Multi-Mission Spacecraft (MMS) module. This is the type of module, in varying sizes and dimensions, that will be used on the Space-Based OTV. The advantages this type of module packaging system offers are that the design already exists and has been flight-qualified, and that the interfaces with the Module Servicing Tool (MST) allow ease of module removal and replacement.

MULTI-MISSION SPACECRAFT ORU

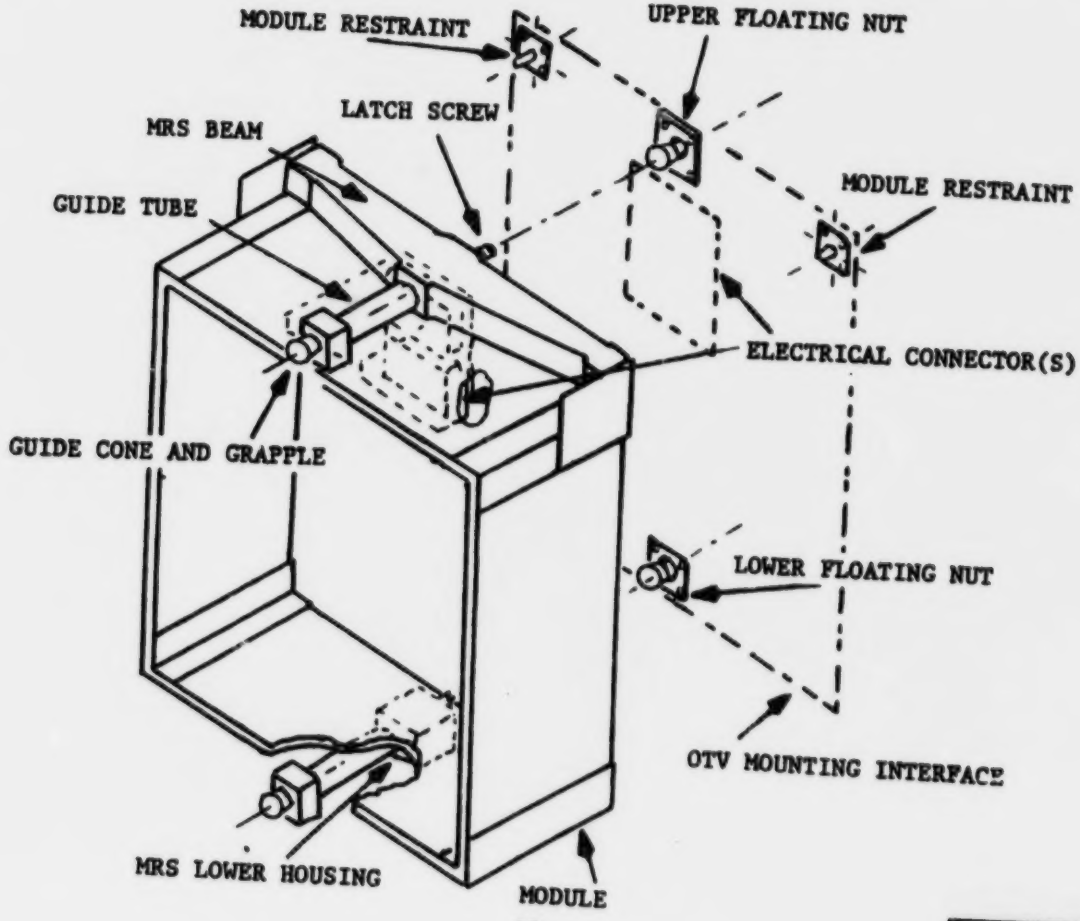

MARTIN MARIETTA

Here we see the Module Servicing Tool (MST) configured on the end of an RMS, in preparation for removal of an MMS module on the Space-Based OTV.

RMS CONFIGURED MST

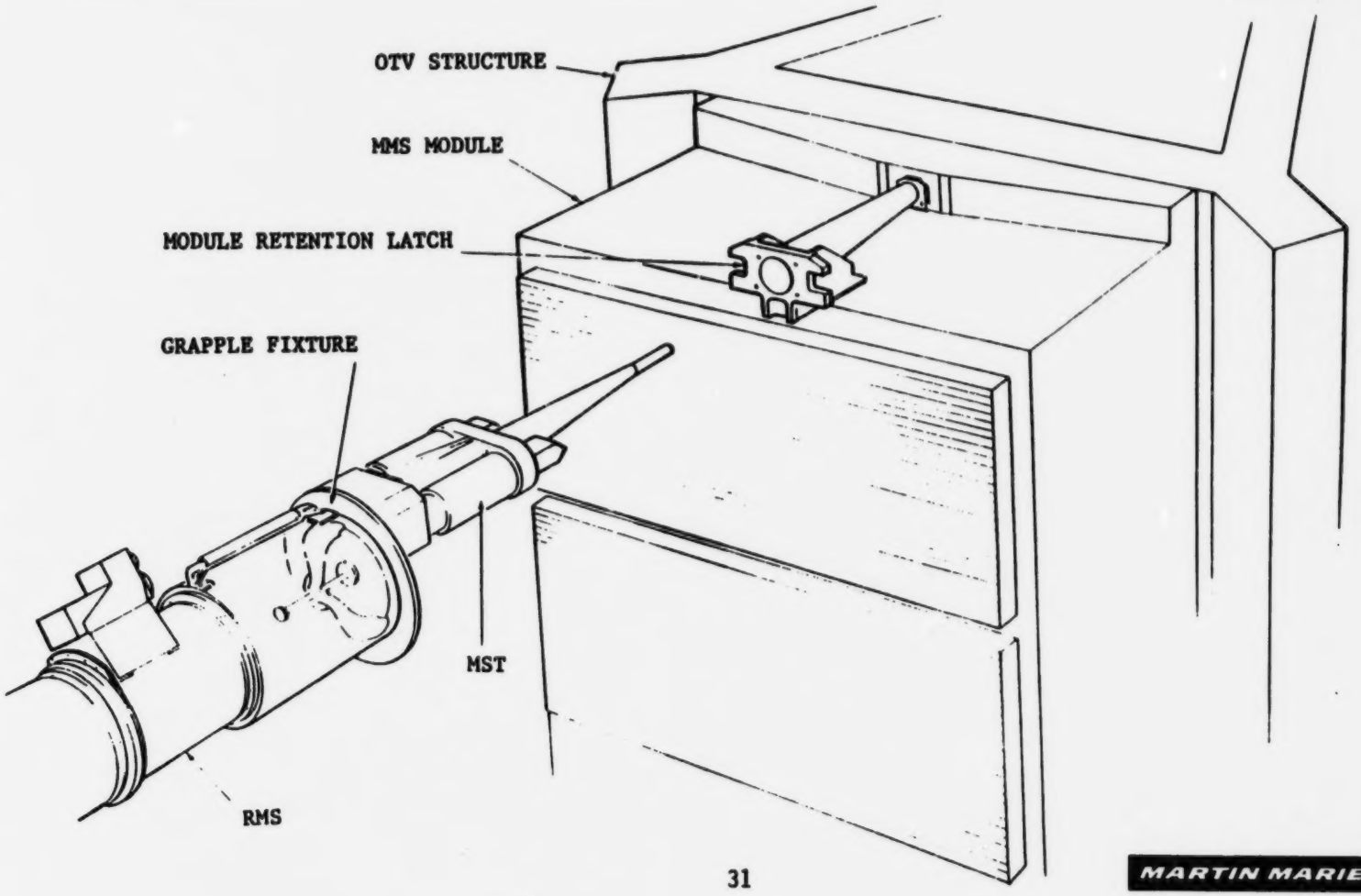

MARTIN MARIETTA

2.4 PTV SPACE BASING DESIGN CRITERIA AND GUIDELINES (CONCLUDED)

Here we see the MST configured for use by an Extra-Vehicular (EV) astronaut in removing an MMS module from the Space Based OTV.

For additional information on space basing design criteria and guidelines, please consult the referenced technical memoranda.

EV ASTRONAUT CONFIGURED MST

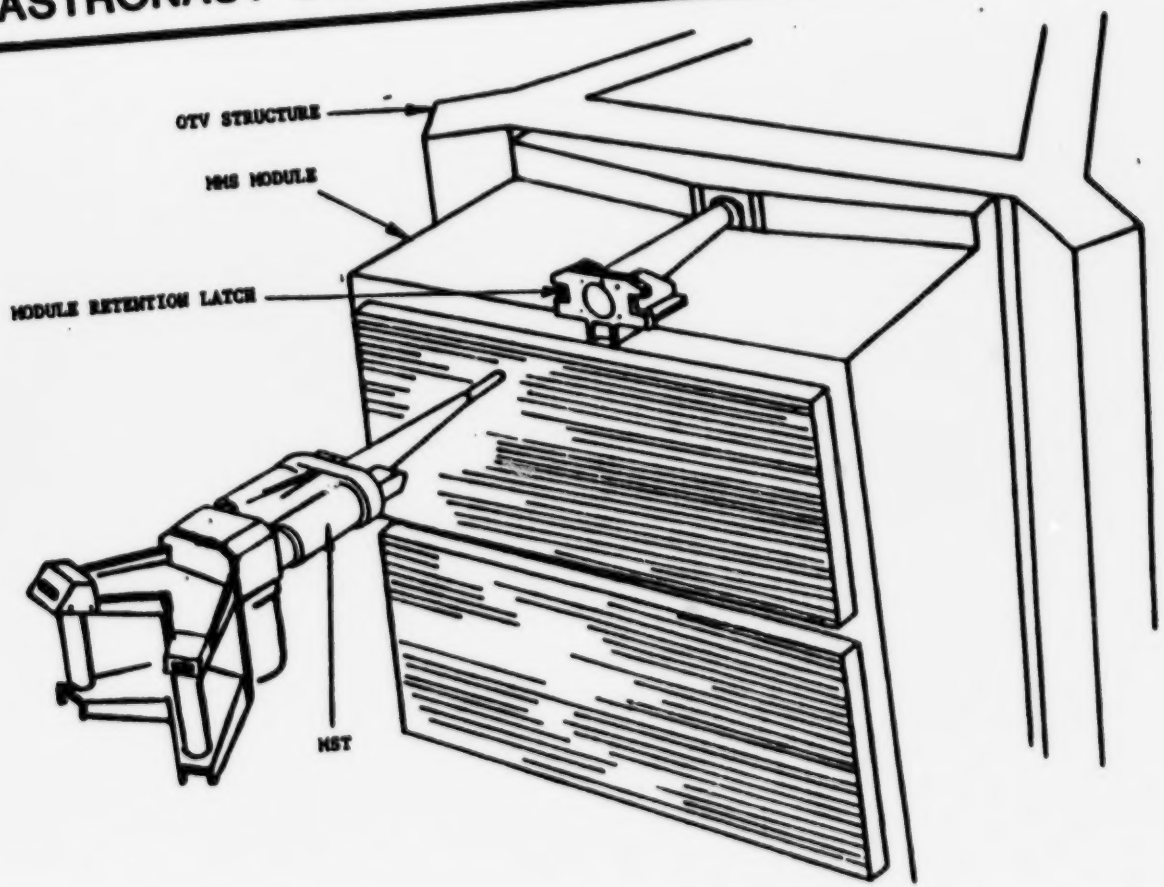

MARTIN MARIETTA

PRECEDING PAGE BLANK NOT FILMED

3.0 SPACE-BASED OTV ACCOMMODATIONS

3.1 SPACE-BASED OTV FAMILY - REV. 7 MISSION MODEL

These then are candidate concepts provided by Task 3, Space-Based OTV Concept Definition, in support of the Revision 7 Mission Model. They are shown from the perspective of maintenance, storage, and reconfiguration. The storable OTV family is shown on the left side of the chart and the cryogenic family is shown on the right. The changes to this family as a consequence of the Revision 8 Mission Model and other considerations will be shown in subsequent charts.

Within the storable OTV family, the majority of missions are satisfied with a perigee stage having a 53K pound propellant load capacity. For missions involving multiple payload deliveries, this same 53K perigee stage is outfitted with a multiple payload carrier that is returned at the end of the mission. To facilitate this carrier return, the 53K perigee stage must be reconfigured with a 32 foot aerobrake. To support unmanned servicing missions, the 53K perigee stage (with a 25 foot aerobrake) becomes a first stage, with a second stage having a 25K pound propellant load capacity and a 32 foot aerobrake. Support of manned servicing missions requires a 90K first stage, with a 32 foot aerobrake, and a 53K second stage, with a 41 foot aerobrake. These two stages are not used for any other missions; the 53K second stage is outfitted for larger reactant tanks, water holding tank, etc., and it is not planned to utilize this stage for nominal delivery missions because of the weight penalty. Neither is it planned to reconfigure the stage onorbit because of the amount of time required. Without considering spares, the net resultant effect of the storable OTV family upon Space Station accommodations is that, by the first manned servicing mission, four different stages will have to be stored onorbit. When considering spares, onorbit storage volume requirements become extensive. Between the various stage sizes, only the engines and the avionics are all common. There is some commonality in aerobrake and tank sizes, but this commonality still results in storing three different sized tanks and aerobrakes.

For the cryogenic OTV family, accommodations are somewhat simplified. The single stage with a 55K pound propellant load capacity satisfies the majority of missions. However, by the first manned servicing mission, an 81K single stage must be added, with another 81K stage added to support the 80K lunar delivery missions. Without considering spares, the net resultant effect upon Space Station accommodations is a clear evolutionary path of storing first one, then two, and then three stages onorbit. When considering spares, there is commonality between the engines and avionics for the two stage sizes. Obviously, there is no commonality between the main propellant tanks of the two stages, requiring the onorbit storage of four different tank sizes. Not so obviously, the 44 foot aerobrakes are not the same. The lunar delivery brake is heavier than the manned servicing brake, which in turn is heavier than the nominal delivery brake. Consequently, three different aerobrakes must be stored onorbit.

SPACE-BASED OTV FAMILY - REV 7 MISSION MODEL

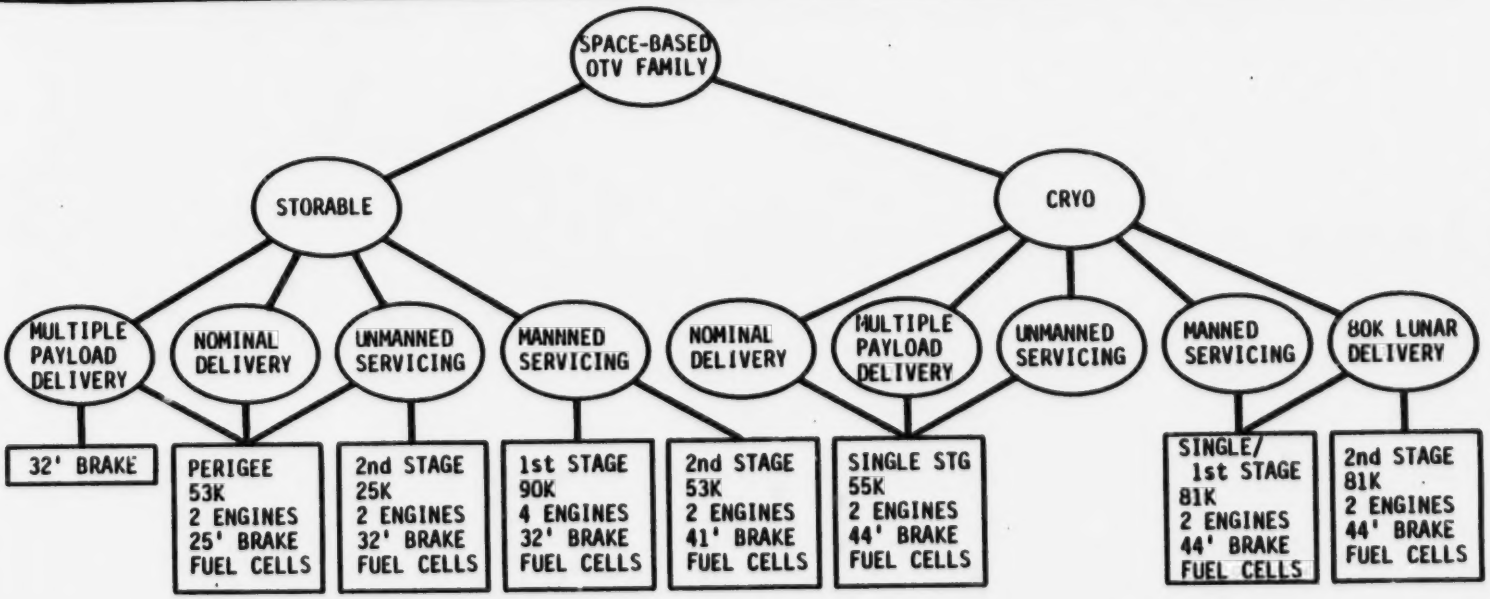

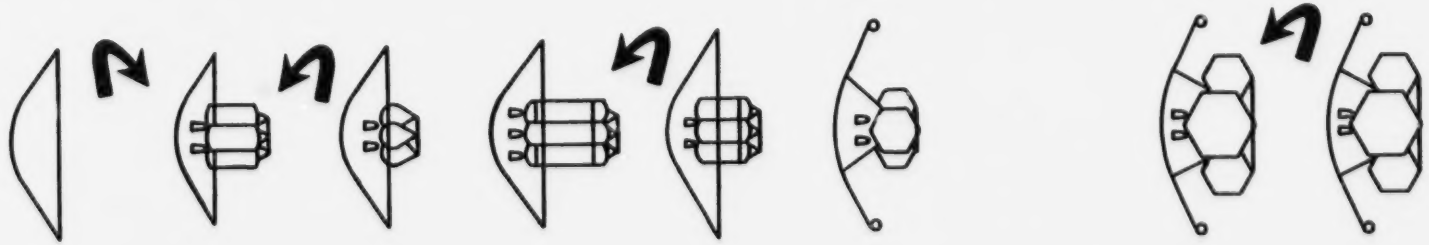

MARTIN MARIETTA

3.1.1 CRYOGENIC SPACE-BASED OTV FAMILY - REVISION 7 MISSION MODEL

The facing page chart shows another perspective of the cryogenic Space-Based OTV family as driven by the Revision 7 Mission Model. As can be seen, the 55K stage performs the majority of missions, a single 81K stage performs the manned GEO servicing mission, and two 81K stages perform the heavier 80K lunar delivery mission.

CRYOGENIC SBOTV FAMILY - REV 7 MISSION MODEL

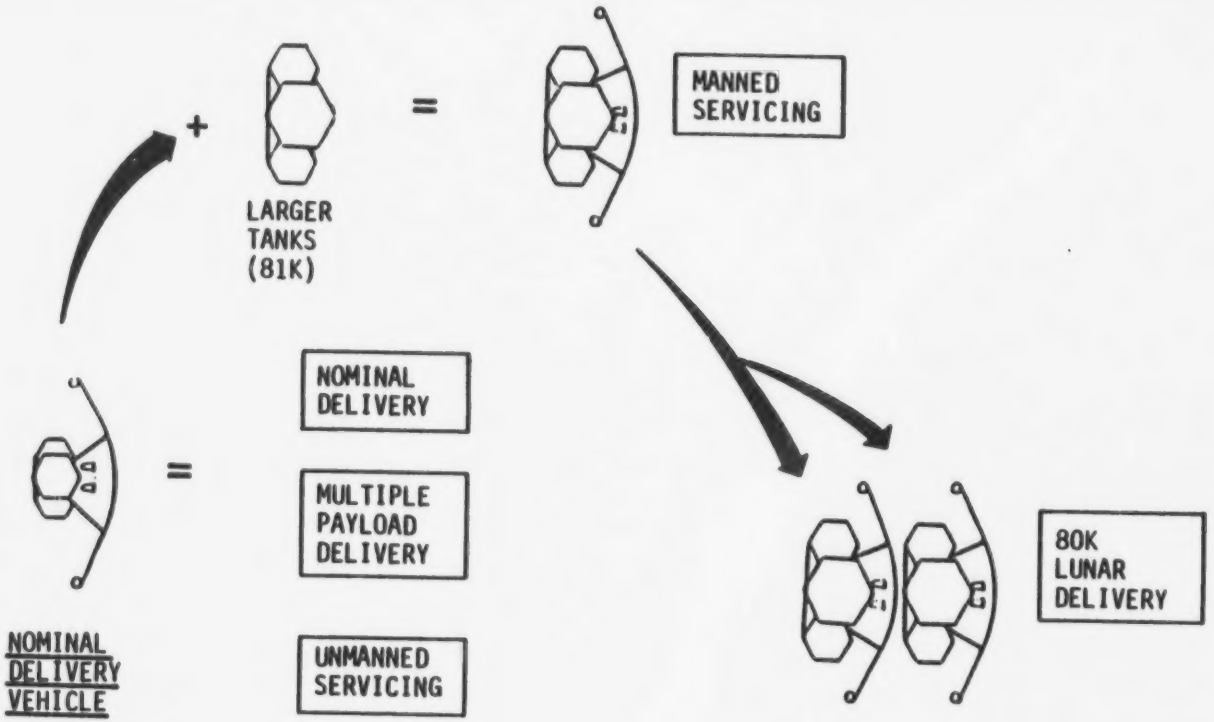

NOMINAL DELIVERY VEHICLE

55K TANKS
2 ENGINES

COMMON:
FUEL CELLS
AVIONICS

MARTIN MARIETTA

3.1.1 RESULTANT CRYOGENIC SPACE-BASED OTV FAMILY - REVISION 8 MISSION MODEL

The effects of the Revision 8 Mission Model on the cryogenic Space-Based OTV family are shown on the facing part chart. As with Revision 7, the 55K stage remains the workhorse, satisfying the majority of missions. Because of the reduction in the manned GEO servicing mission payload weight from 14,000 lbm to 7,500 lbm (up and down), and the reduction in payload length from 23 feet to 10 feet, the 55K stage also supports that mission. Two 81K stages are still required to perform the 80K lunar delivery missions. For the nominal Revision 8 Mission Model, the first such delivery occurs in the year 2006, while for the low model, the schedule slips out to the year 2015.

RESULTANT CRYO SBOTV FAMILY - REVISION 8 MISSION MODEL

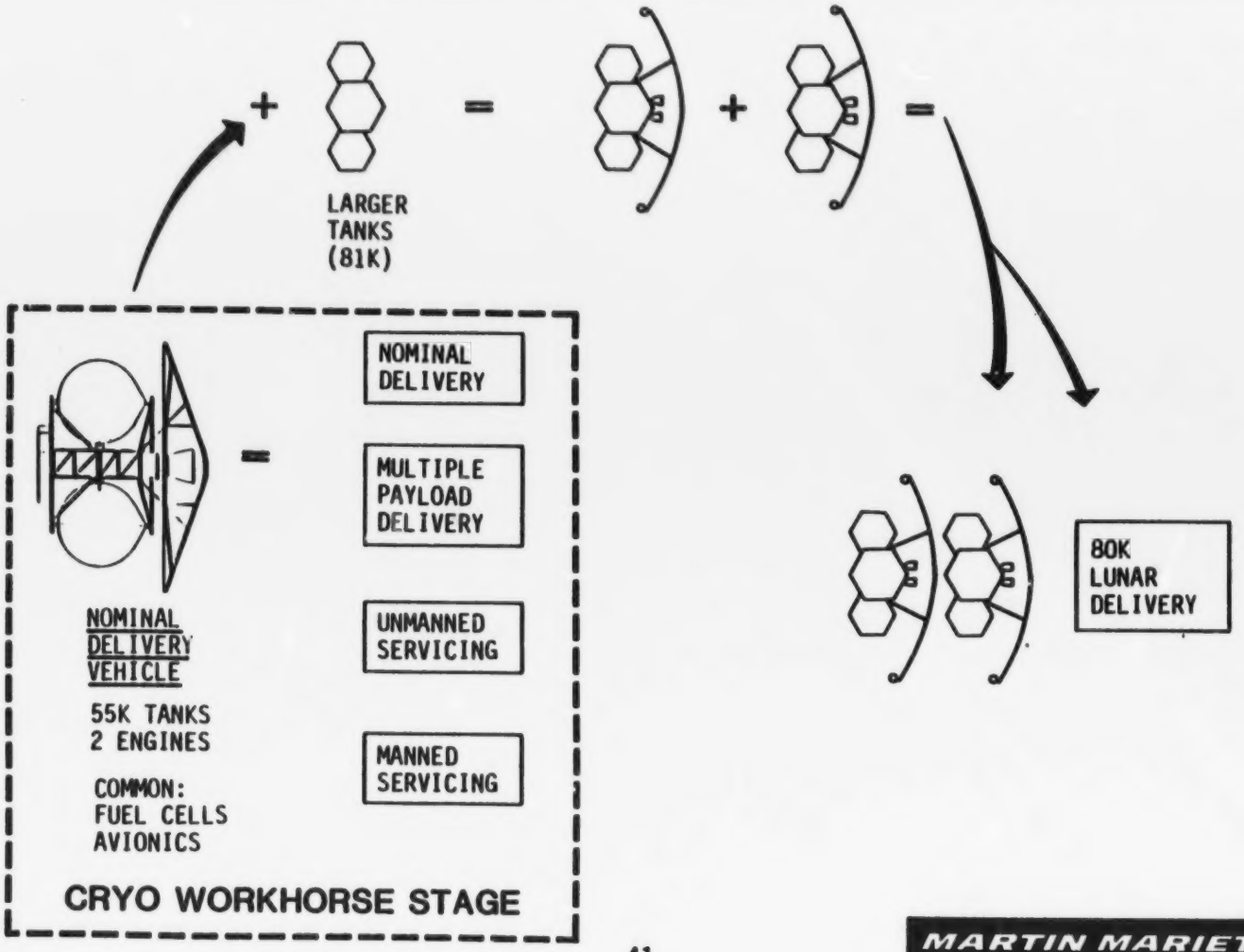

MARTIN MARIETTA

3.1.1 CRYOGENIC SPACE-BASED OTV FAMILY - SUBSYSTEM AND SERVICING LOCATIONS

The cryogenic Space-Based OTV design concepts developed under Task 3 were evaluated for accessibility, maintainability, and provision for adequate accommodation interfaces. The next four charts identify the concepts evaluated.

A side view of the Space-Based cryogenic OTV is shown. In this case, it is the 81K stage, but the same subsystem and servicing locations also hold for the 55K stage. For clarity, the liquid hydrogen tanks have been excluded from this view. Two of four cradle interface points are shown, with the supporting structure to the center truss excluded for clarity.

Attached to the liquid oxygen tank is an RMS grapple fixture to facilitate tank removal and replacement. Another RMS grapple fixture is attached to the aerobrake strut for a similar purpose. Mounted on the engine door frame, next to the ACS thrusters located on the aerobrake, are the OMV interface points.

At the top of the vehicle, avionics modules are mounted around the circumference of the avionics ring. The locations of the various avionics subsystems on the ring have been excluded from this view, but are shown in a later chart. The location of the power/signal/propellant/pressurant umbilical port is also shown on the avionics ring.

CRYO SBOTV SUBSYSTEM & SERVICING LOCATIONS

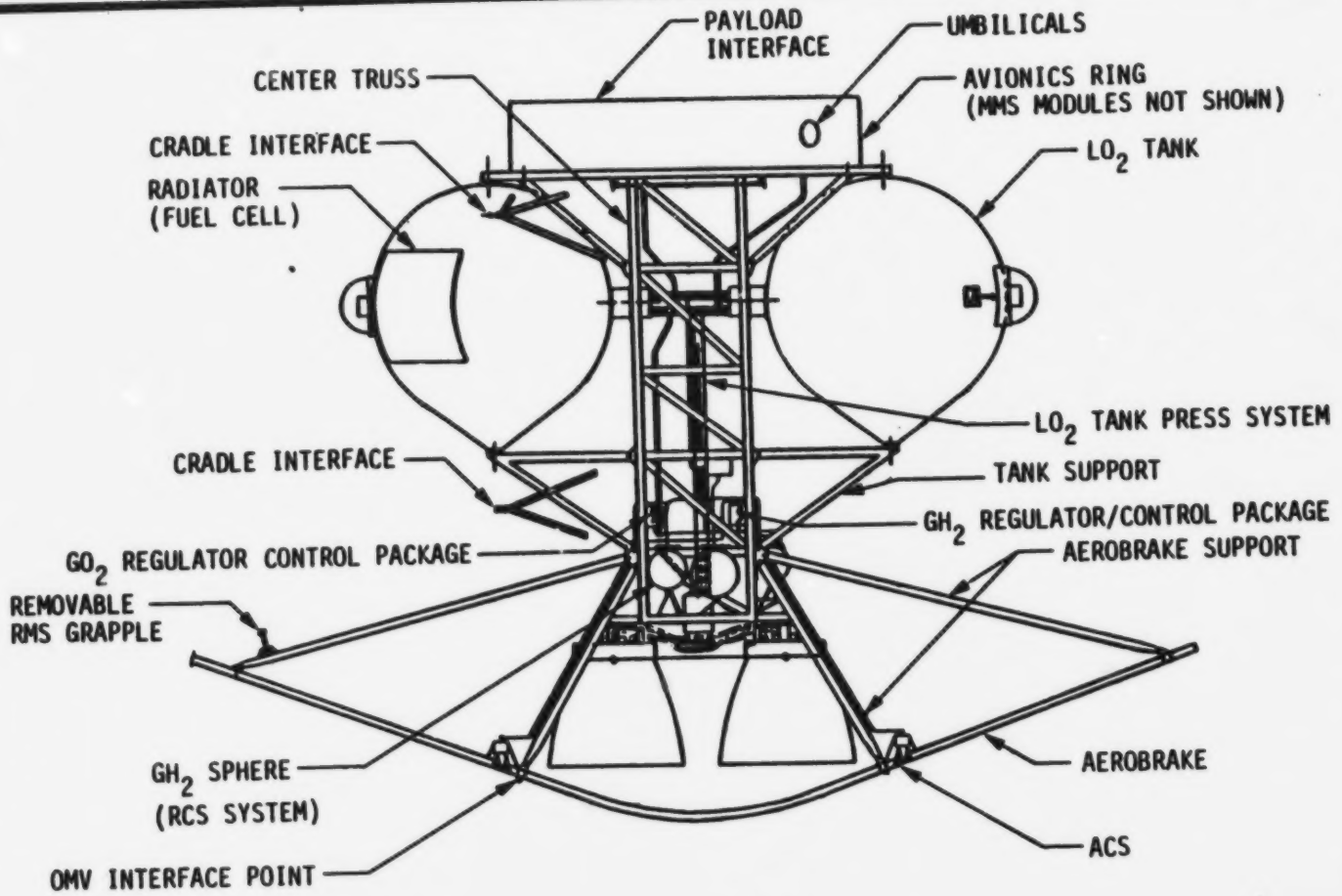

SIDE VIEW 1

MARTIN MARIETTA

A side view of the cryogenic SBOTV, rotated 90° from the previous view, is shown. In this view, the liquid oxygen tanks have been excluded for clarity. The other two cradle interface points are shown, again with the supporting structure to the center truss excluded for clarity. As can be seen, each liquid hydrogen tank is also outfitted with an RMS grapple fixture to facilitate tank removal and replacement. In the event that the entire avionics ring must be removed and replaced, it also is outfitted with an RMS grapple fixture.

CRYO SBOTV SUBSYSTEM & SERVICING LOCATIONS

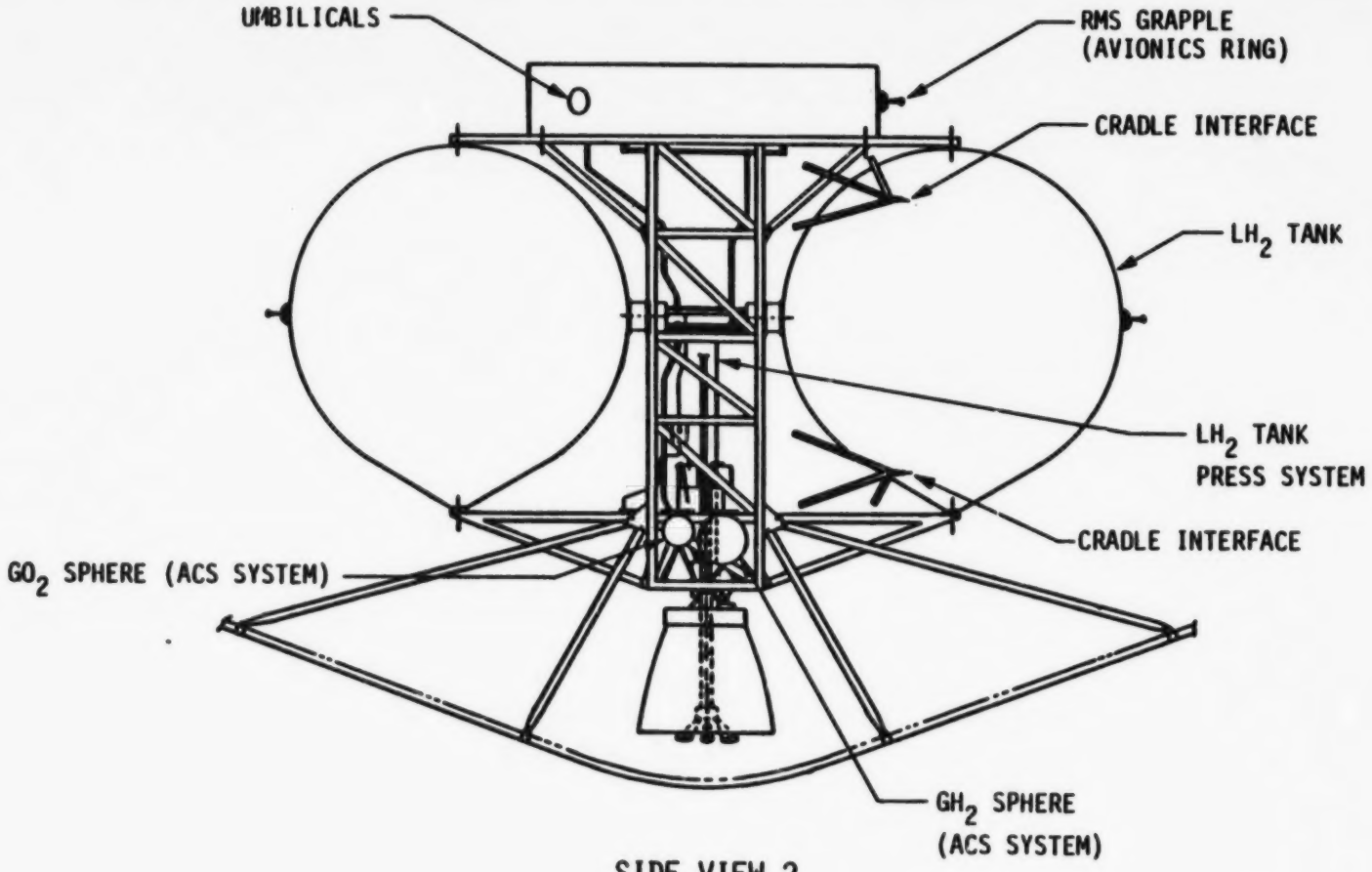

SIDE VIEW 2

MARTIN MARIETTA

3.1.1 CRYOGENIC SPACE-BASED OTV FAMILY - SUBSYSTEM AND SERVICING LOCATIONS (Continued)

A top view of the cryogenic SBOTV is shown, with identification of the tank RMS grapples and cradle interfaces previously discussed. Not previously shown is the two point space crane interface located along the longitudinal axis at 90° to the cradle interfaces. This space crane interface alows the translation of a fully loaded OMV/OTV/Payload stack out of the hangar, minimizing rotational torques by utilizing a two point pickup.

CRYO SBOTV SUBSYSTEM & SERVICING LOCATIONS

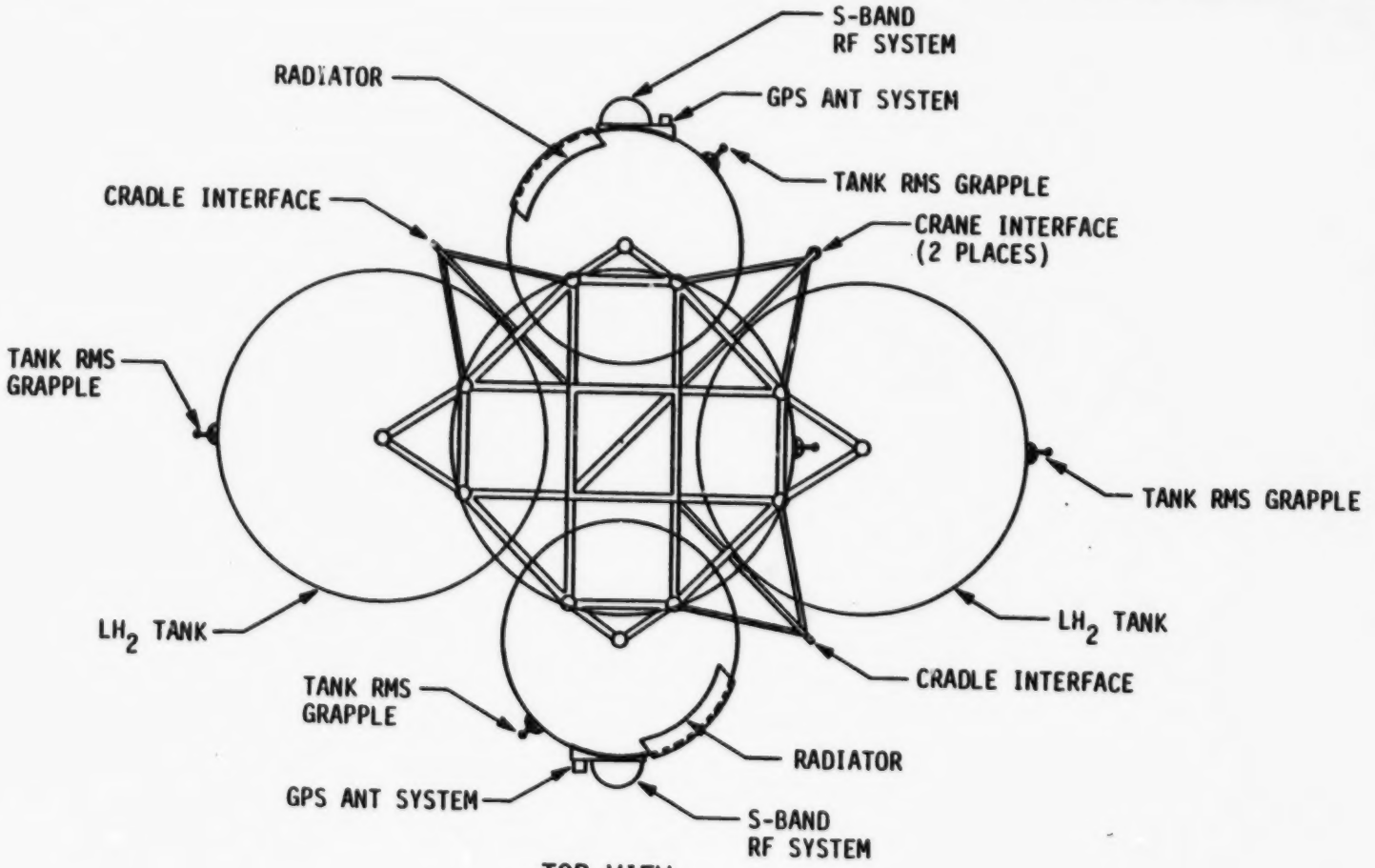

TOP VIEW

MARTIN MARIETTA

An "unrolled" view of the avionics ring as envisioned at midterm is shown, with the location of the various avionics subsystems identified. Each of these avionics subsystems will be packaged in an MMS-type module, allowing removal and replacement with an MST (Module Servicing Tool) by either EVA or a manipulator arm. As will be seen in Paragraph 3.3.12, Recommended Space-Based OTV Design Changes, this individual subsystem packaging concept has been somewhat modified.

CRYO SBOTV SUBSYSTEM & SERVICING LOCATIONS

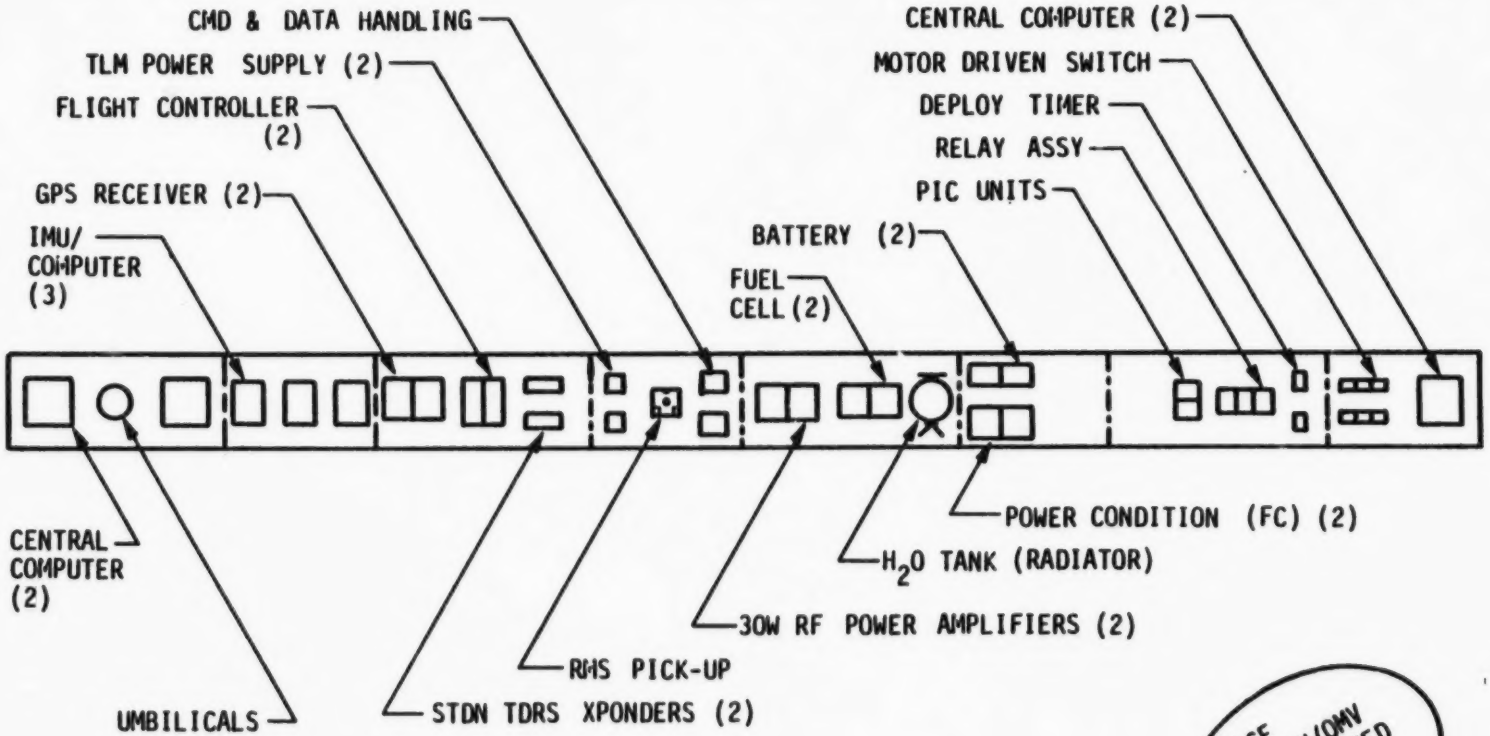

AVIONICS RING (UNROLLED)

SPACE STATION/OMV STANDARDIZED COMPONENT CANDIDATES

MARTIN MARIETTA

3.1.2 STORABLE SPACE-BASED OTV FAMILY - REVISION 7 MISSION MODEL

The facing page chart shows another perspective of the storable Space-Based OTV family as driven by the Revision 7 Mission Model. As can be seen, the 53K stage in combination with different sized aerobrakes and a 25K or 90K stage performs all of the missions excluding the 80K lunar delivery missions. The heavy lunar delivery mission was excluded because of the required stage sizes and the excessive propellant requirements.

STORABLE SBOTV FAMILY - REV 7 MISSION MODEL

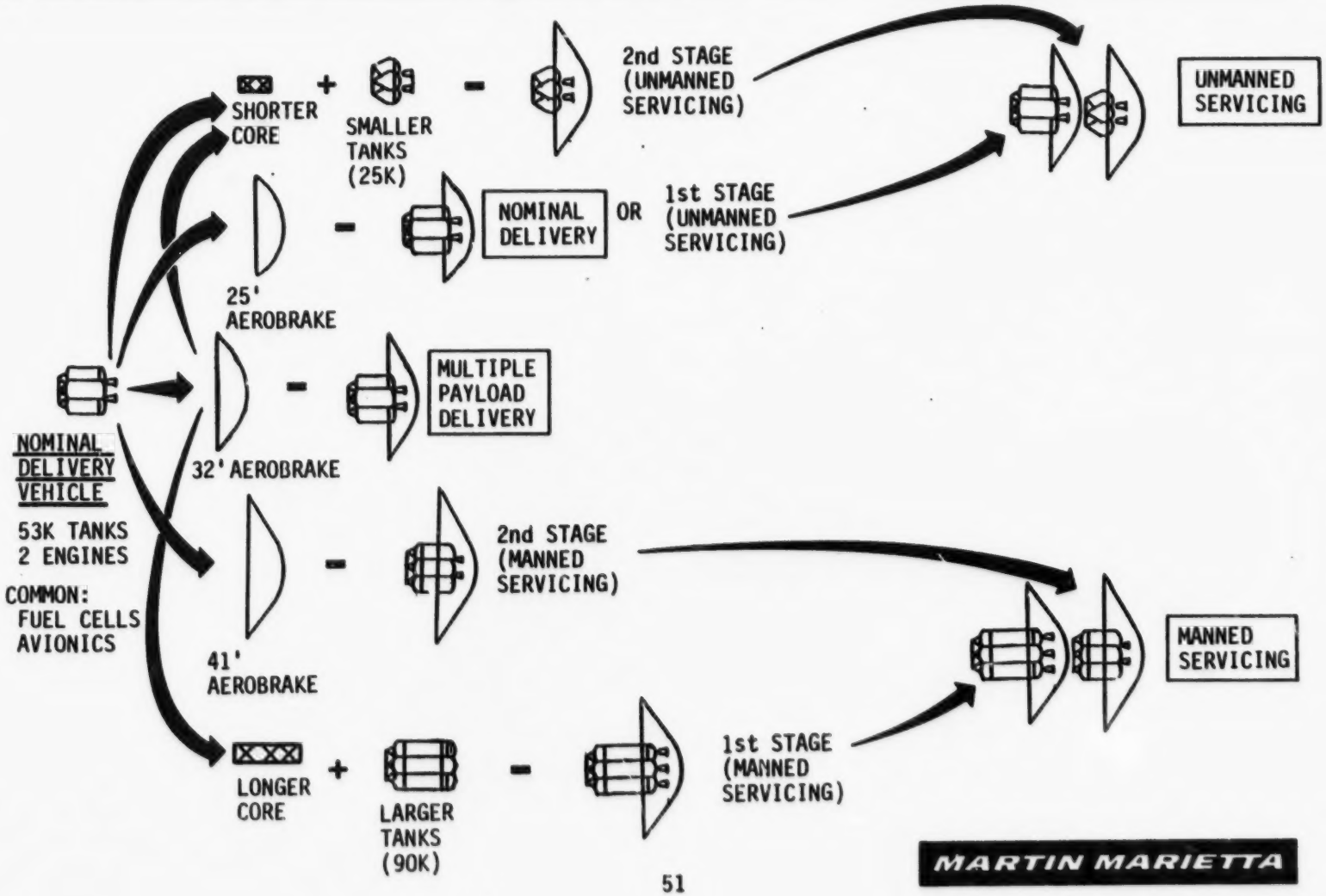

MARTIN MARIETTA

3.1.2 STORABLE SPACE-BASED OTV FAMILY - SUBSYSTEM AND SERVICING LOCATIONS

The storable Space-Based OTV design concepts developed under Task 3 were also evaluated for accessibility, maintainability, and provision for adequate accommodation interfaces. The next two charts identify the concepts evaluated.

Side view 1 shows the Space-Based storable OTV. In this instance, it is the 53K stage, but the same subsystem and servicing locations also apply to the 25K and 90K stages. The cradle and OMV interfaces are identified, as well as the oxidizer tank and aerobrake RMS grapple fixture locations.

Side view 2 identifies the location of the space crane interfaces and the fuel tank RMS grapple fixtures.

SPACE-BASED
STORABLE SUBSYSTEM AND SERVICING LOCATIONS

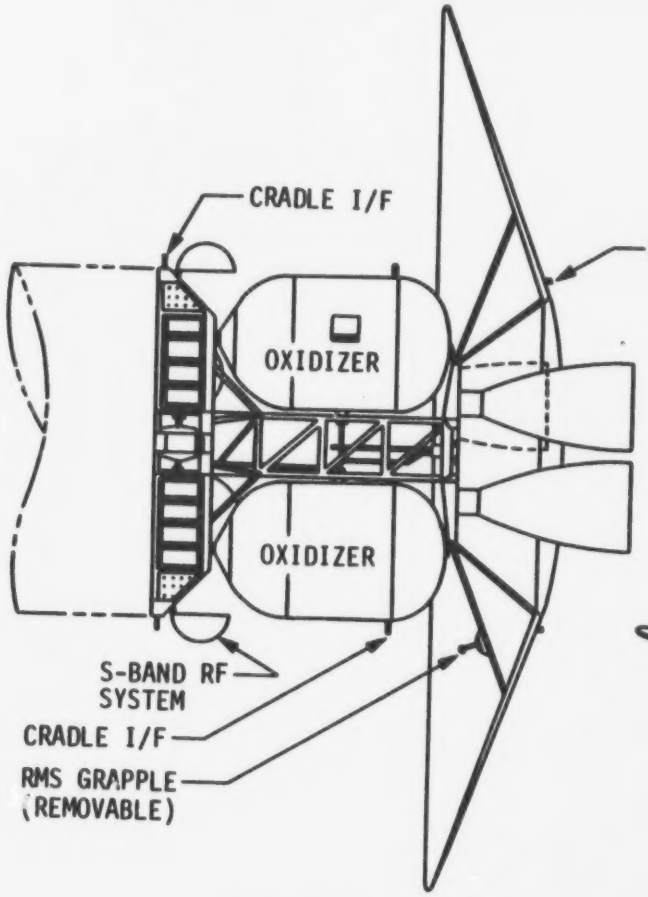

SIDE VIEW 1

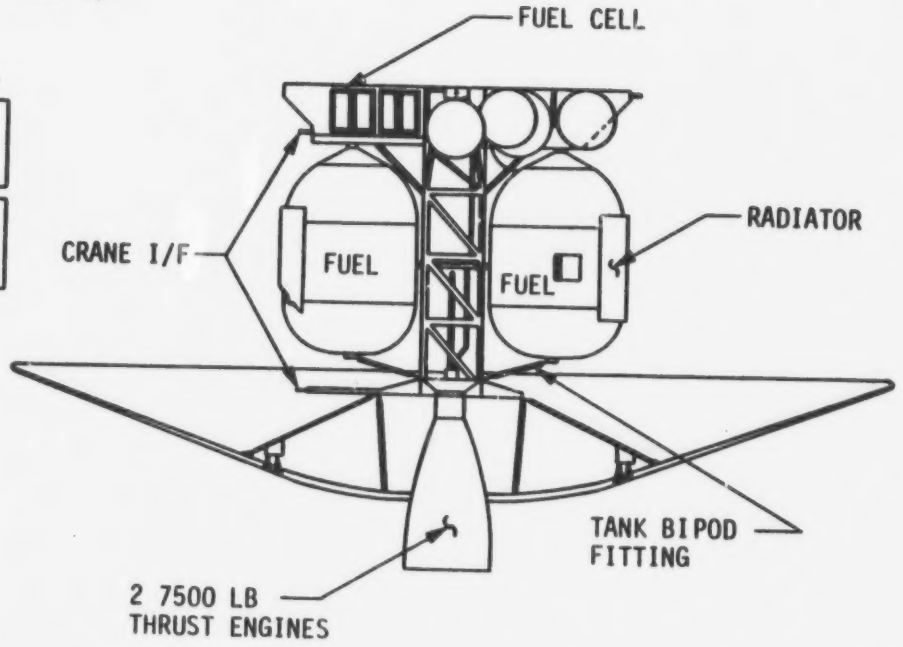

SIDE VIEW 2

MARTIN MARIETTA

The main structure view shows the locations of the avionics MMS modules, the various required supply tanks, and the umbilical ports with separation for fuel and oxidizer.

The bottom view shows the arrangement of the fuel and oxidizer tank RMS grapple fixtures.

SPACE-BASED
STORABLE SUBSYSTEM AND SERVICING LOCATIONS

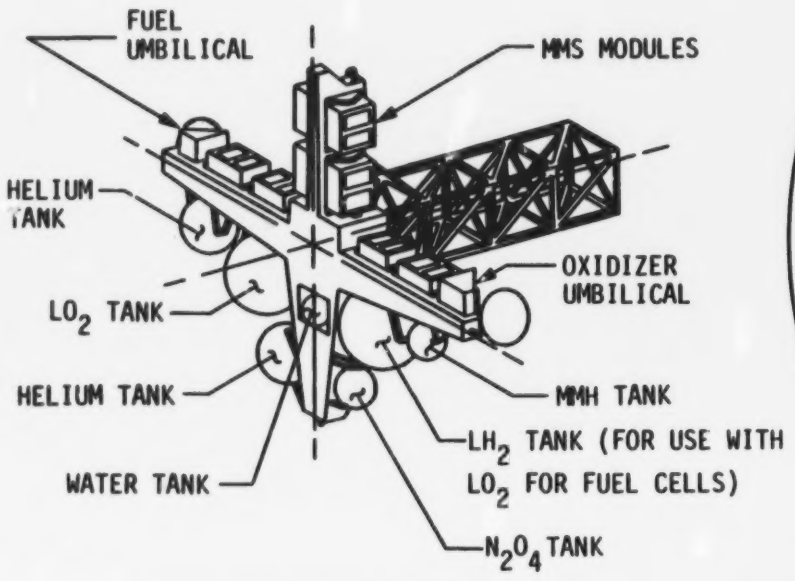

MAIN STRUCTURE VIEW

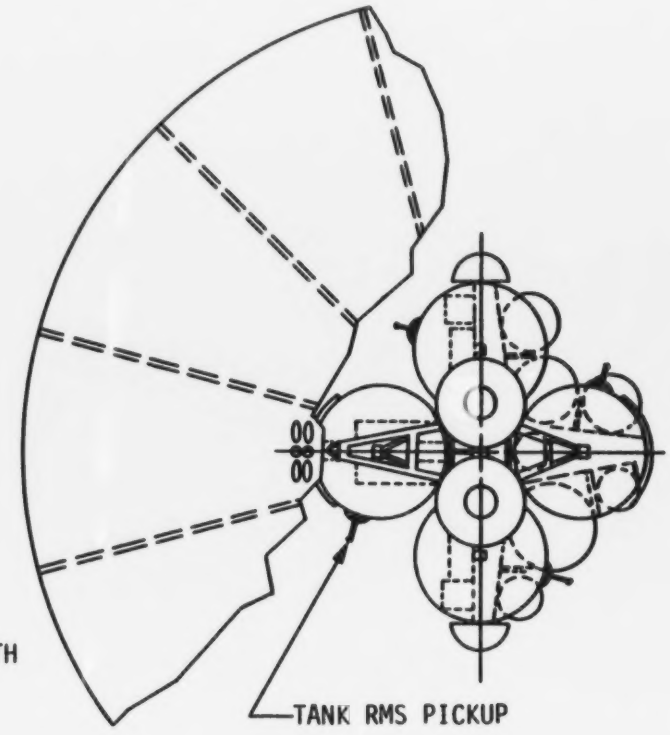

BOTTOM VIEW

3.1.2 STORABLE SPACE BASED OTV FAMILY - STORABLE OTV CONSIDERATIONS

At the Midterm Review presented in early March 1985, we identified the storable OTV family corresponding to the Revision 7 Mission Model. We also identified the subsystem and servicing locations just discussed, reviewed the trade study results showing Space Station as the optimum storable propellant tank farm location, and defined the storable propellant storage concept.

When we received the Revision 8 Mission Model, we encountered the same problem as with Revision 7 insofar as the storable OTV is concerned. Neither mission model contains long duration driver missions requiring a storable OTV. System cost trades performed since Midterm select cryo over storable due to propellant transportation costs, leading us to conclude that the storable OTV is not a viable candidate at this time, and we have therefore excluded it from further accommodations consideration. Should driver missions appear that require a storable OTV, the subject could be easily readdressed. Detailed functional flows and timelines have already been defined and are published in the Appendix of this Report.

We have ascertained very little difference between the storable and cryo OTV Space Station accommodations. Storable propellant storage requires more mass with approximately the same power consumption requirements while occupying less volume. Due to the similar size of the aerobrake and the swept volumes required for ORU changeout, the hangar size remains relatively the same. The diameter of the cradle carriage is smaller due to the smaller diameter propellant tanks. We do note, however, the crew involvement and timelines are more impacted by the storable OTV in that more multi-staged vehicles would be required to satisfy the mission model.

STORABLE OTV CONSIDERATIONS

- *REV 8 MISSION MODEL DOES NOT CONTAIN LONG DURATION DRIVER MISSIONS REQUIRING STORABLE OTV*
- *SYSTEM COST TRADES SELECT CRYO OVER STORABLE*
  - PROPELLANT TRANSPORTATION COSTS
- *STORABLE OTV EXCLUDED FROM FURTHER ACCOMMODATIONS CONSIDERATION*
- **COULD BE RE-ADDRESSED SHOULD DRIVER MISSION(S) APPEAR**
  - FUNCTIONAL FLOWS AND DETAILED TIMELINES ALREADY COMPLETED
- **PRIMARY DIFFERENCES BETWEEN STORABLE AND CRYO ACCOMMODATIONS**
  - PROPELLANT STORAGE REQUIRES MORE MASS/SAME POWER/LESS VOLUME
  - HANGAR SIZE REMAINS APPROXIMATELY SAME
  - SMALLER CRADLE CARRIAGE DIAMETER
  - LONGER TIMELINES/MORE MULTI-STAGED VEHICLES

3.1.3 SPACE-BASED OTV MISSION MODEL - REVISION 8 COMPOSITION SUMMARY

The facing page chart shows the effects of integrating the FOC Space Station date with the Revision 8 Mission Model. For the nominal mission model, with an FOC Space Station date of 1997, the number of SBOTV missions from Space Station through the year 2010 equates to 227. For the low mission model, with an FOC date of 1999, SBOTV missions from Space Station through the year 2010 shrink to 110.

One prime difference between Revision 7 and 8 Mission Models is the reduction in the manned GEO sortie payload weight from 14,000 lbs up and down to 7,500 lbs up and down. Another prime difference is that in the Revision 8 Low Mission Model, the 80K Lunar Delivery Missions are scheduled beyond the year 2010.

SBOTV MISSION MODEL COMPOSITION SUMMARY - REV. 8

PAYLOAD NO SERIES	MISSION GROUP	WEIGHT (LB) UP/DOWN	LENGTH (FT)	MISSION MODEL LOW	MISSION MODEL NOM	IOC LOW / NOM
13000	EXPERIMENTAL GEO PLATFORM	12000/0	30	1	~~1~~ *0*	2000/~~1995~~ -
13000	OPERATIONAL GEO PLATFORM	20000/0	35	5	6	2004/1998
13000	UNMANNED GEO PLAT SERVICING	7000/4500	9	1	~~1~~ *0*	2001/~~1996~~ -
15000	MANNED GEO SORTIE	7500/7500	10	3	17	2008/2002
15000	GEO SERVICE STATION ELEMENTS	13000/0	15-20	2	2	2002/1998
15000	GEO SERVICE STA LOGISTICS	12000/2000	15	5	26	2004/1998
17000	PLANETARY	2000-40000/0	5-35	6 *4*	~~14~~ *12*	*1999/1997* ~~1994/1994~~
17000	UNMANNED LUNAR	5000-20000/0	20	2	2	2007/2001
17000	MANNED LUNAR SORTIE	80,000/15,000	50	0	3	2015/2006
17000	LUNAR BASE ELEMENTS	80,000/0	53	0	3	2020/2008
17000	LUNAR BASE SORTIE/LOGISTICS	80,000/10,000	60	0	6	2021/2009
18000	MULTIPLE GEO PAYLOAD DELIVERY	12000/2000	25	~~46~~ *34*	~~79~~ *68*	*1999/1997* ~~1994/1994~~
18000	LARGE GEO SATELLITE DELIVERY	20000/0	20-35	3	7	2001/1997
19000	DOD (GENERIC)	12000-20000 (EQUIV.)		~~68~~ *48*	~~85~~ *70*	1999/1997 1994/1994
				~~142~~ *108*	~~252~~ *222*	
10100	REFLIGHTS			~~3~~ *2*	5	*2005* ~~1996~~/1997
			TOTALS	~~145~~ *110*	~~257~~ *227*	

MARTIN MARIETTA

3.1.3 SPACE-BASED OTV MISSION MODEL - REVISION 8 NOMINAL MODEL

The facing page chart displays the number of missions in the nominal model by category per year, and the resultant effect of the deletion of the 30 missions occurring prior to the FOC Space Station date of 1997.

SBOTV NOMINAL MISSION MODEL SUMMARY - REV. 8

MISSIONS	PLD NO.	MISSIONS/FY																		
		93	94	95	96	97	98	99	00	01	02	03	04	05	06	07	08	09	10	TOT
GEO PLATFORM			0	~~1~~	0	0	1	0	1	0	0	0	0	1	0	1	0	1	1	~~7~~ 6
PLANETARY			~~1~~	0	~~1~~	2	1	2	0	0	1	1	0	0	2	0	2	1	0	~~14~~12
MULTIPLE P/L DEL.			~~3~~	~~3~~	~~5~~	3	4	5	6	5	6	4	5	4	5	4	5	6	6	~~79~~68
IND. GEO SATELLITES			0	0	0	1	0	1	0	1	0	1	0	0	1	1	0	1	0	7
UNMAN. PLAT SERV.					~~1~~	0	0	0	0	0	0	0	0	0	0	0	0	0	0	~~1~~ 0
MANNED GEO SORTIES											1	2	2	2	2	2	2	2	2	17
GEO SERV. STATION ELEMENTS							1	0	0	0	1	0	0	0	0	0	0	0	0	2
GEO SERV. STA. LOGISTICS							2	2	2	2	2	2	2	2	2	2	2	2	2	26
UNMANNED LUNAR										1	0	1	0	0	0	0	0	0	0	2
MANNED LUNAR SORTIES															1	1	1	0	0	3
LUNAR BASE ELEMENTS																	2	1	0	3
LUNAR SORTIE/LOGISTICS																		2	4	6
DOD			~~5~~	~~5~~	~~5~~	5	5	5	5	5	5	5	5	5	5	5	5	5	5	~~85~~ 70
SUBTOTAL			~~9~~	~~9~~	~~12~~	11	14	15	14	14	16	16	14	14	18	16	19	21	20	222 ~~252~~
REFLIGHTS		0	0	0	0	1	0	0	0	1	0	0	1	0	0	1	0	0	1	5
TOTAL			~~9~~	~~9~~	~~12~~	12	14	15	14	15	16	16	15	14	18	17	19	21	21	227 ~~257~~

3.1.3 SPACE-BASED OTV MISSION MODEL - REVISION 8 LOW MODEL

This facing page chart shows the number of missions in the low model by category per year and the resultant effect of the deletion of the 35 missions occurring prior to the FOC Space Station date of 1999.

SBOTV LOW MISSION MODEL SUMMARY - REV. 8

MISSIONS	PLD NO.	MISSIONS/FY																		
		93	94	95	96	97	98	99	00	01	02	03	04	05	06	07	08	09	10	TOT
GEO PLATFORM									1	0	0	0	1	0	0	1	1	1	1	6
PLANETARY			~~1~~	0	~~1~~	0	0	1	0	0	0	1	0	0	1	0	0	1	0	6 ~~4~~
MULTIPLE P/L DEL			~~2~~	~~3~~	~~1~~	~~3~~	~~3~~	2	3	3	2	4	3	2	3	2	4	3	3	~~46~~ ~~34~~
IND. GEO SATELLITES										1	0	0	0	0	1	0	0	0	1	3
UNMAN PLAT SERV.										1	0	0	0	0	0	0	0	0	0	1
MANNED GEO SORTIES											1	0	0	0	0	1	0	0	0	2
GEO SERV. STATION ELEMENTS										0	0	0	1	1	1	0	1	1	0	5
GEO SERV. STA. LOGISTICS																	1	1	1	3
UNMANNED LUNAR																1	0	1	0	2
MANNED LUNAR SORTIES																				0
LUNAR BASE ELEMENTS																				0
LUNAR SORTIE/LOGISTICS																				0
DOD			~~4~~	~~4~~	~~4~~	~~4~~	~~4~~	4	4	4	4	4	4	4	4	4	4	4	4	~~68~~ ~~48~~
SUBTOTAL			~~7~~	~~7~~	~~6~~	~~7~~	~~7~~	7	8	9	7	9	9	7	10	9	11	12	10	~~108~~ ~~142~~
REFLIGHTS					~~1~~	0	0	0	0	0	0	0	0	1	0	0	0	0	1	~~3~~ ~~2~~
TOTAL			~~7~~	~~7~~	~~7~~	~~7~~	~~7~~	7	8	9	7	9	9	8	10	9	11	12	11	~~110~~ ~~145~~

3.2 SPACE-BASED OTV REQUIREMENTS DEFINITION

PRECEDING PAGE BLANK NOT FILMED

3.2.1 SPACE BASED OTV REQUIREMENTS DEFINITION OVERVIEW

Under Paragraph 1.3, Study Methodology, Space Based OTV Requirements Definition was defined as Task 5.2.1. The facing page chart shows the sequence used to preform this task. There was a time lapse between the completion of Task 5.1 and the initiation of Task 5.2.1 to allow performance of the design activities of Task 2 and 3 and the mission operational analyses of Task 4. As candidate OTV concepts were provided by Tasks 2 and 3, their key characteristics were subjected to a requirements assessment including subsystem accessibility and maintainability. From this assessment, key Space Station basic accommodation parameters were assembled for each candidate OTV concept. These parameters included such items as the amount of disassembly and assembly required, the frequency of ORU changeout, workspace and swept volume requirements, etc. These parameters and the mission operational analyses of Task 4 were combined during the performance of functional flow analyses.

Functional flow analyses, divided into six operational phases from OTV retrieval through launch, were performed to identify each process step required in the phase. As an adjunct, using the fleet requirement from Task 4, additional functional flow analyses were conducted to identify the additional process steps necessary to accommodate an OTV fleet. The results of these analyses were used to prepare a definition statement. The statement defined functional requirements including such items as process flows, timelines, and EVA/IVA/automated functions, and identified the corresponding crew size, skills, and associated crew timelines. The statement also defined the physical and functional interactions between the OTV and the Space Station, as well as the specific characteristics of the particular candidate OTV concept under review that both necessitated and allowed these interactions. This definition statement was provided as input to Task 5.2.2 (Paragraph 3.3).

The definition statement as completed was quite extensive, comprising several hundred pages, and is provided as Appendix A to this Volume.

TASK 5.2.1 SPACE BASED OTV REQUIREMENTS DEFINITION OVERVIEW

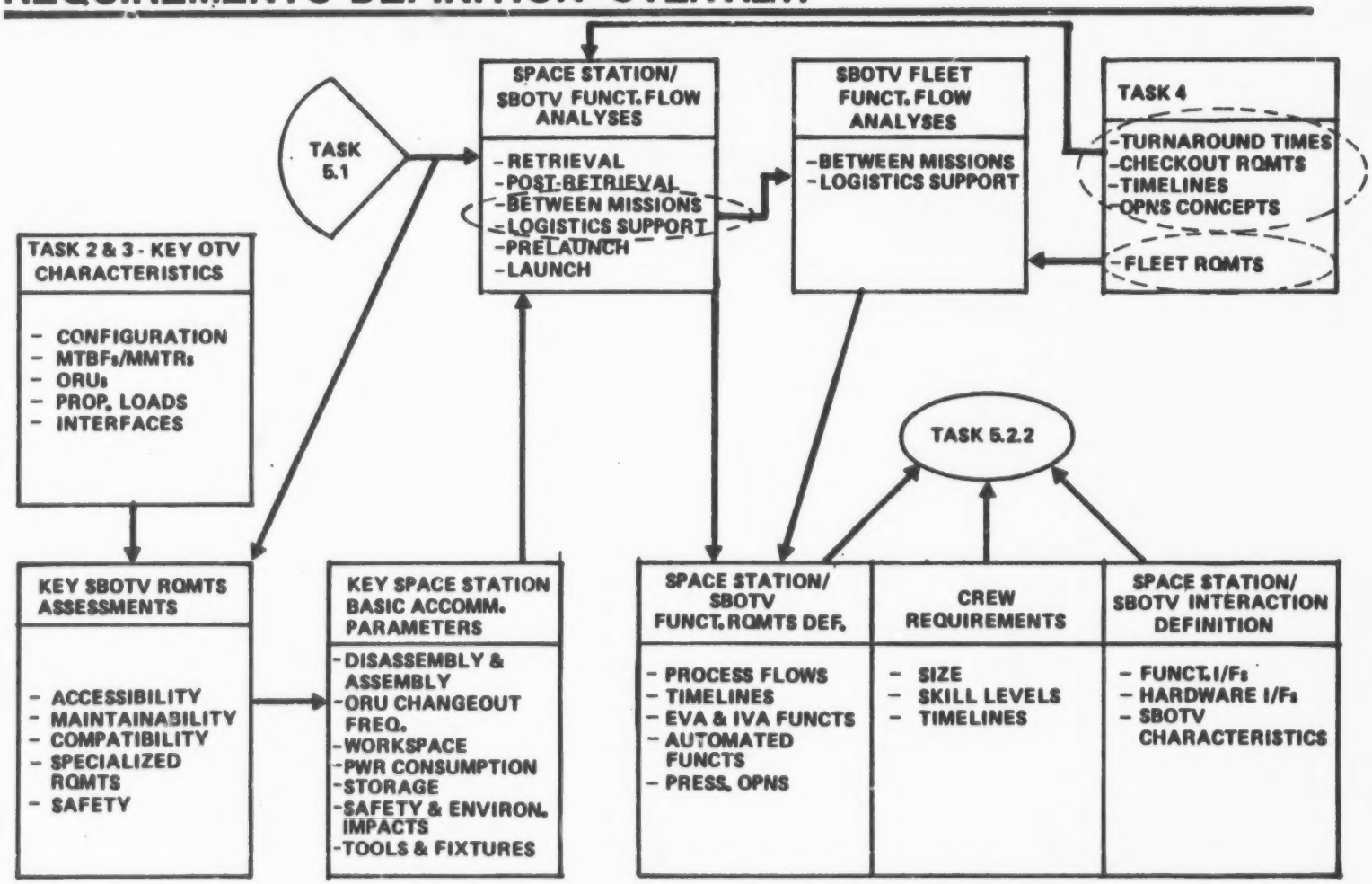

MARTIN MARIETTA

3.2.1 SPACE-BASED OTV REQUIREMENTS DEFINITION OVERVIEW - OTV SPACE STATION ACCOMMODATIONS ASSUMPTIONS AND GROUND RULES

The assumptions and ground rules we used in developing the requirements definition result partly from the SOW key objectives, partly from the need to minimize the OTV stage weight (reducing propellant requirements), and partly as a consequence of considering the OTV space-basing problem.

One of the prime ground rules of the OTV Concept Definition Study was to minimize impact to the Space Station. The low-g requirement drives the accommodations to be placed at or near the Space Station center-of-mass. The limited crew available drives the servicing and maintenance operations to be performed using automation and robotics. The concern over power consumption drives propellant tank farm facility considerations to alternatives other than refrigeration or reliquefaction.

After some deliberation, the OTV design group determined that the OTV should be a truck. This decision relieves the OTV of having to carry the weight of a rendezvous radar and a six degree-of-freedom RCS thruster system on every GEO round trip. It also means that the OTV must rely on the OMV to place it in launch position, and to retrieve it at the end of its mission for return to Space Station.

In considering the OTV space-basing problem, one eventually asks the question, "How can all these Cape Kennedy-type operations be performed at Space Station with considerable less facility and crew resources?" The crew resources problem is resolved through the use of automation and robotics. The facility resource problem is resolved by taking advantage of the zero-g environment through use of a single facility for servicing and maintenance, payload and OMV integration, deployment and retrieval, and for spares storage. The use of a single facility minimizes equipment requirements and translation operations and timelines, providing for the most efficient operational mode.

OTV SS ACCOMMODATIONS ASSUMPTIONS & GROUNDRULES

- *OTV SHALL MINIMIZE IMPACTS TO SPACE STATION*
  - LOW-G (10^{-5})
  - CREW MANPOWER AND SKILL REQUIREMENTS
  - POWER CONSUMPTION

- *OTV IS A TRUCK*
  - CONTROL ZONE LAUNCH & RETRIEVAL PERFORMED BY OMV
  - GEO PAYLOAD SERVICING/RETRIEVAL PERFORMED BY OMV WHILE SEPARATED FROM OTV

- *OTV SHALL TAKE ADVANTAGE OF ZERO-G ENVIRONMENT BY USING A SINGLE FACILITY*
  - SERVICING & MAINTENANCE
  - PAYLOAD & OMV INTEGRATION
  - DEPLOYMENT & RETRIEVAL
  - STAGE & ORU STORAGE

3.2.2 KEY SPACE BASED OTV REQUIREMENTS ASSESSMENT

After reviewing the design concepts of Task 3, we concluded that all subsystems were accessible to either robotic manipulator arms or EV astronauts mounted on platforms or RMS MFR (Mobile Foot Restraint). Of necessity, the propellant and pressurant feed lines and power/signal interconnect lines are routed through the center truss and removal and replacement of these lines would require replacement of the core structure.

All of the subsystems were designed to be maintained through removal and replacement on minimum timelines. This was achieved through the utilization of standard subsystem interfaces such as RMS-type grapple fixtures and MST (Module Servicing Tool) handling provisions.

Considering the size and mass of the various stages, cradle and crane interfaces on all stages provide positive control during stage, payload, and OMV integration, and translation of the OMV/OTV/payload stack to and from the berthed position.

OTV REQUIREMENTS ASSESSMENT

- **FOR SPACE-BASED OTV**

  - ***SUBSYSTEMS ARE ACCESSIBLE*** TO EITHER ROBOTIC SYSTEMS OR EV ASTRONAUTS
    - PROPELLANT/PRESSURANT/POWER/SIGNAL LINE REPLACEMENT REQUIRES CORE STRUCTURE REPLACEMENT

  - ***SUBSYSTEMS CAN BE MAINTAINED*** THROUGH REMOVAL AND REPLACEMENT ON MINIMUM TIMELINES
    - STANDARD SUBSYSTEM INTERFACES (GRAPPLE FIXTURES, MST PROVISIONS, ETC)

  - ***CRADLE AND CRANE INTERFACES PROVIDE POSITIVE CONTROL*** OF LONG AND LARGE MASSES FOR SAFETY

3.2.3 KEY SPACE STATION BASIC ACCOMMODATION PARAMETERS

As a consequence of the space-based OTV designs and of the assessment performed, we identified the Space Station basic accommodation parameters needed to support the OTV. A few of the key parameters are shown on the facing chart.

The need for a propellant tank farm is obvious. The Space Station must provide the OTV a safe haven from meteoroid damage. The OTV main propellant tanks have been designed to the minimum gauge possible so as to minimize weight, saving propellant. These tanks are outfitted with meteoroid protective barriers for use during mission operations, but these barriers are insufficient for long-term storage. Additionally, the fabric aerobrake is not designed to withstand long-term meteoroid exposure.

Within this meteroid protective hangar, large volumes are needed for removal/replacement operations. The first driver for the base diameter of the hangar is the aerobrake at 44 feet in diameter. A second driver is the diameter of the stage and the main propellant tanks. Stage diameter is on the order of 36 feet, while main tank diameters range to 14 1/2 feet. A further driver is the swept volume requirements needed for the manipulator arms to perform removal/replacement operations

The Space Station must provide mechanisms capable of handling long and large masses. Per the Mission Model, the longest and largest vehicle launch stack is for the 80K Lunar Delivery Mission, with a 60 foot payload length, 30 foot OTV length (2 required), and a 5 foot OMV length, resulting in a configuration approximating 300K pounds and 125 feet in length. Dimensions and masses for the most demanding mission other than the 80K lunar delivery are also shown.

As previously identified on the Space-Based OTV Family chart, large volumes are required to store various OTV stage, aerobrake, and tank sizes.

To minimize removal/replacement operations and still provide assurance of the operational integrity of the OTV, the Space Station must provide nondestructure inspection systems and sensors. Such systems envisioned include an acousto-optical system for crack detection, an exo-electron emission system for fatigue (microcrack) detection, a radiation collection system for measuring surface wear, and a laser holography system for detecting leaks in a vacuum.

KEY BASIC ACCOMMODATION PARAMETERS

- **ACCOMMODATIONS MUST PROVIDE:**
  - ***PROPELLANT TANK FARM***
  - ***METEOROID PROTECTION***
    - MINIMUM GAUGE PROPELLANT TANKS
    - AEROBRAKE FABRIC
  - ***LARGE VOLUMES FOR REMOVE / REPLACE OPERATIONS***
    - LARGE PROPELLANT TANKS
    - AEROBRAKE
  - ***MECHANISMS TO HANDLE LONG AND LARGE MASSES***
    - UPPER LIMIT: (CRYO/80K LUNAR) ~300,000 LBS & 125 FEET LONG
      : (CRYO/20K GEO) ~125,000 LBS & 56 FEET LONG
  - ***LARGE VOLUMES FOR STORAGE OF OTV STAGES AND SPARES*** (EVOLUTIONARY)
  - ***NONDESTRUCTIVE INSPECTION TECHNIQUES TO MINIMIZE REMOVE / REPLACE OPERATIONS AND SPARES STORAGE***

PAGE BLANK NOT FILMED

3.2.4 SPACE STATION / SPACE-BASED OTV FUNCTIONAL FLOW ANALYSES

3.2.4.1 FUNCTIONAL FLOW ANALYSIS PREREQUISITES

Before proceeding into functional flow analyses, certain information was needed so as to reduce the analyses to a manageable quantity.

In the area of mission operations, the need was for mission operational timeline and fleet requirement drivers to the OTV turnaround time at Space Station. The location of the propellant tank farm, be it remote, tethered, or in situ, results in radical differences in the functional flow, as does the operational concepts for OTV integration with the payload and OMV, and launch/retrieve scenarios for the OMV/OTV/Payload stack.

The Space Station crew limitations can also greatly influence the functional flow, as can the need for any sort of equipment maintenance within a pressurized area.

All of these issues will be addressed in following charts.

FUNCTIONAL FLOW ANALYSIS PREREQUISITES

- TO REDUCE FLOWS TO A MANAGEABLE QUANTITY, NEED-TO-KNOW:
  - ***MISSION OPS ANALYSIS RESULTS (TASK 4)***
    - SBOTV MISSION OPS TIMELINES (YEARLY)
    - SBOTV FLEET REQUIREMENTS (EVOLUTIONARY)
  - ***PROPELLANT TANK FARM OPTIMUM LOCATION***
  - ***OPERATIONAL CONCEPTS***
    - OMV / OTV / PAYLOAD INTEGRATION & CHECKOUT
    - SPACE STATION LAUNCH & RETRIEVE
  - ***SPACE STATION CREW LIMITATIONS***
  - ***PRESSURIZED MAINTENANCE AREA DRIVERS***

3.2.4.1.1 SPACE-BASED OTV MISSION OPERATIONS ANALYSES - REVISION 7 MISSION MODEL

The facing chart identifies the mission operations information provided by Task 4, relative to the Revision 7 Mission Model, to support functional flow analyses.

Using the previously defined space-based OTV family, both storables and cryos, the maximum yearly mission operations time for any individual OTV stage, excluding OTV turnaround at Space Station, occurs in the year 2009. For storables, this amounts to 2,883 hours MET (Mission Elapsed Time), an for cryos, 4,263 hours MET. Part of the reason for the MET difference between styorables and cryos results from the deletion of the storable lunar delivery mission.

Using the mission model and the OTV space-based family, an analysis was performed to determine when the particular stages were needed onorbit at Space Station, and this data is shown on the facing chart. This then forms the basis for evolutionary buildup of accommodation requirements. Again, recognize there is no entry for a storable stage in the year 2006 because of exclusion of the lunar delivery mission.

The final item on the chart addresses the average OTV stage turnaround time crossover point at Space Station. This is the point where, if the average turnaround time per stage were exceeded, an additional OTV stage would be needed. This need could also be satisfied by using an existing larger stage to perform the function, obviously with some weight penalty.

The mission operations analysis determined that the year 2009 was the period where the combination of mission elapsed time for any one stage and total number of stages processed was maximum. The crossover point then is the total number of stages to be processed divided into a year's time, or the difference between a year's time and the maximum mission ops time for any stage divided by the times that particular stage has to be processed, whichever is less. This is the best approximation that can be determined without mission delineation by month. For storables, the turnaround time crossover point amounts to some 182 hours ET (Elapsed Time), while for cryos the point was 155 hours ET. Repeating, the storable mission model did not include lunar delivery, resulting in a longer allowable turnaround time.

MISSION OPS ANALYSIS RESULTS (TASK 4) REV. 7

- o USING DEFINED SPACE-BASED OTV FAMILY
  - MAX MISSION OPS YEARLY TIMELINE *(ANY STAGE / YEAR 2009)*
    - STORABLEs: *2883 HOURS MET*
    - CRYOs: *4263 HOURS MET*
  - STAGES ONORBIT *(NOMINAL MISSION MODEL)*
    - STORABLEs: *1995 = 2*
      1997 = 4
    - CRYOs: *1995 = 1*
      1997 = 2
      2006 = 3
  - SPACE STATION OTV TURNAROUND TIME CROSSOVER POINT FOR ADDITIONAL STAGES
    - *THE MAXIMUM AVERAGE ALLOWABLE TURNAROUND TIME PER STAGE, INCLUDING PAYLOAD MATE, WITH EXISTING SBOTV FAMILY*
    - STORABLEs = *182 HOURS ET*
    - CRYOs = *155 HOURS ET*

3.2.4.1.1 SPACE-BASED OTV MISSION OPERATIONS ANALYSES - REVISION 8 MISSION MODEL

A mission operations (Task 4) analysis was also performed using the Revision 8 Mission Model, with two important differences: 1) the Storable OTV was eliminated from further consideration; and 2) although key events (80K Lunar Delivery Mission) were provided beyond the year 2010, no annual mission schedule was given. Consequently, the annual mission operations timelines have not been considered beyond that point.

The maximum mission operations time for any Cryogenic OTV occurred in 2010, and amounted to 2,220 hours Mission Elapsed Time (MET). This happened to be the 81K OTV second stage for the 80K Lunar Delivery Mission, which occurred four times during the year.

The number of Cryogenic Space-Based OTVs onorbit at any one time is shown on the facing page chart. Lacking an annual flight schedule beyond the year 2010, we could only identify that a minimum of two stages were required for the low mission model in the year 2015.

Because of the reduction in missions per the Revision 8 Mission Model, the maximum average allowable turnaround time per stage more than doubled the 155 hours Elapsed Time (ET) of Revision 7, to 339 hours ET. As will be shown later, this turnaround time is easily met.

MISSION OPS ANALYSIS RESULTS (TASK 4) REV. 8

- o USING DEFINED CRYOGENIC SPACE-BASED OTV FAMILY
  - MAX MISSION OPS YEARLY TIMELINE (*YEAR 2010*)
    - *2,220 HOURS MET*
  - STAGES ON-ORBIT
    - NOMINAL MISSION MODEL: 1997 = *1*
      2006 = *2*
    - LOW MISSION MODEL: 1999 = *1*
      2015 = *2 (MINIMUM)*
  - SBOTV TURNAROUND TIME CROSSOVER POINT FOR ADDITIONAL CRYO STAGES
    - *339 HOURS ET*

3.2.4.1.2 SPACE BASED OTV PROPELLANT TANK FARM ANALYSIS SUMMARY

Storage location trades were performed for both propellant types, considering storage on Space Station versus a free flyer platform versus a tethered fueled facility. The Space Station was selected as the optimum location. Concepts for both cryo and storable propellant storage systems were developed for Space Station with an eye toward minimizing impacts to station operations.

Analyses were performed to select the optimum storage methods for both cryogenic and storable propellants. Included in these analyses were uses for excess boiloff gasses, such as reboost or attitude control. A vented option for storing cryogens was selected with unused residual boiloff expelled through resisto-jets.

All of these trade studies and analyses are reported in detail in Section 8.0 (Space Station/Accommodations Trade STudies and Analyses) of this Report.

OTV PROPELLANT TANK FARM ANALYSIS SUMMARY

- **STORAGE LOCATION TRADES**
  - ***LH_2 / LO_2***: SPACE STATION
    TETHERED
    FREE FLYER
  - ***MMH / N_2O_4***: SPACE STATION
    TETHERED
    FREE FLYER
  - ***SELECTED SPACE STATION LOCATION FOR CRYO AND STORABLE PROPELLANT STORAGE***

- **DEVELOPED IN SITU CONCEPTS FOR CRYO AND STORABLE STORAGE SYSTEMS**

- **PROPELLANT STORAGE ANAYSES**
  - ***LH_2 / LO_2 STORAGE SYSTEM DEFINED***
    - PERFORMED TRADES FOR: VENTED BOILOFF
      REFRIGERATION
      RELIQUEFACTION
    - ***SELECTED VENTED BOILOFF (RESISTO-JETS)***
  - ***MMH / N_2O_4 STORAGE SYSTEM DEFINED***

3.2.4.1.3 HANGAR AND BERTHING REQUIREMENTS

The operational concepts for use of the OTV hangar and associated berthing equipment have impact upon the functional flow analyses. These operational concepts were developed through the following reasoning process.

As a minimum, the hangar and berthing equipment must support OTV servicing and maintenance. Initially, this consists of a single stage, but evolves to a two stage operation. The facility must also support integration and demating of these two stages. In the typical stage-payload iteration scenario, each step is followed by checkout of the integrated articles for verification and validation. The last step of the scenario is propellant resupply, particularly with cryogens. In line with this sequence then, OMV and payload integration with the OTV and subsequent checkout is performed before OTV propellant resupply. Checkout of the OTV and OMV are probably not very time consuming, but checkout of the payload is an unknown, possibly taking 10 to 20 hours. And indeed, customers may eventually desire to "burn-in" payload subsystems to identify early failure modes while the payload is exposed to the space environment under positive control

An orbital mechanics analysis indicates the most appropriate method of launching the OMV/OTV/payload stack is along the Space Station negative velocity vector, thus placement of the hangar along this vector provides this capability.

If the hangar and berthing equipment do not provide all of the above capabilities, then the Space Station must provide alternatives, including mechanisms and umbilicals but more importantly, volumes to accomplish these operations. A view of the current Space Station FOC, with all the various appendages located, discloses there are no such volumes available.

The conclusion, then, is that the hangar and berthing equipment must be multifunctional. They serve as the OTV servicing and maintenance, integration and checkout, and prelaunch and launch facilities all in one.

HANGAR AND BERTHING REQUIREMENTS

- **THE HANGAR AND BERTHING EQUIPMENT MUST MINIMALLY SUPPORT**
  - OTV SERVICING AND MAINTENANCE (SINGLE AND DUAL STAGE)
  - OTV STAGE INTEGRATION & DEMATE
- **THE HANGAR AND BERTHING EQUIPMENT SHOULD ALSO PROVIDE FOR**
  - OMV INTEGRATION & DEMATE
  - PAYLOAD INTEGRATION & DEMATE
- **IF NOT, THEN SPACE STATION MUST SEPARATELY PROVIDE FOR**
  - OMV & PAYLOAD INTEGRATION & DEMATE
  - OMV/OTV/PAYLOAD STACK LAUNCH & RETRIEVAL
  - OTV PROPELLANT RESUPPLY & DETANK
  - MECHANISMS AND VOLUMES TO ACCOMPLISH THESE OPERATIONS
- ***CONCLUSION: THE HANGAR AND BERTHING EQUIPMENT SHOULD BE MULTIFUNCTIONAL***

3.2.4.1.3 HANGAR AND BERTHING REQUIREMENTS - OTV SERVICING/MAINTENANCE FACILITY (CONCEPT 1)

In the first concept we developed, the OTV hangar/maintenance facility was positioned close to the center of mass of the Space Station, as shown on the following page, to minimize the impact on station micro-g requirements. The large size of the hangar was driven by the requirement to service up to two OTVs and a payload, and then accomplish mating and verification of the vehicles prior to deployment. The hangar is an unpressurized volume that provides micro-meteroid and thermal protection for OTV subsystems and EVA crew members when required. The first inset depicts the processing configuration for a typical OTV mission where an OMV delivers the OTV/payload to the deployment zone. The OMV is processed in the opposite end of the OTV hangar and then moved to the OTV end (second inset) for mating to the OTV. The mated and verified OMV/OTV/payload assembly is deployed from the hangar as a unit.

OTV SERVICING / MAINTENANCE FACILITY (CONCEPT 1)

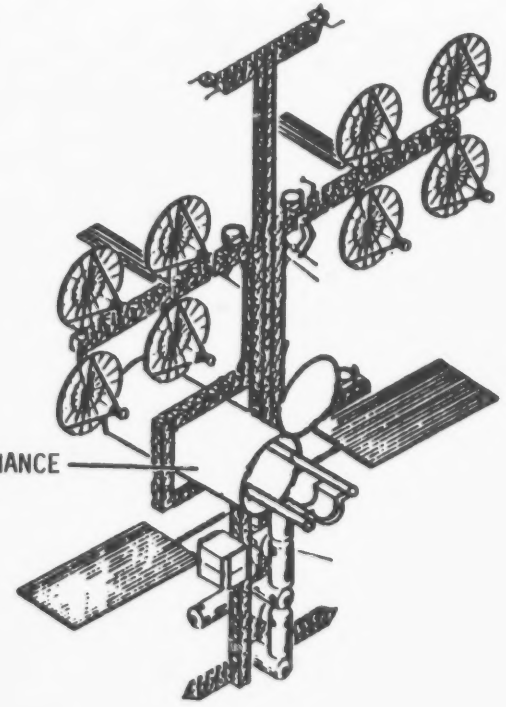

I PROCESSING

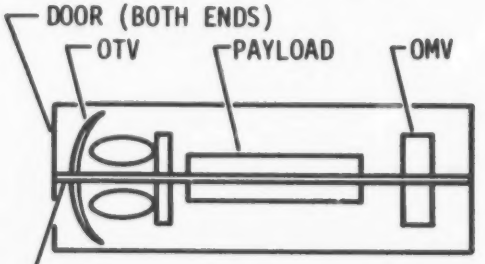

MOTOR-DRIVEN RAILS (POSITIONS VEHICLES/PAYLOADS IN HANGAR AND EXTENDS FOR RETRIEVAL/DEPLOYMENT VIA MRMS)

II INTEGRATION/VERIFICATION

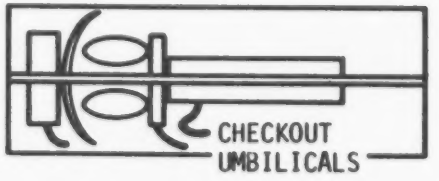

MARTIN MARIETTA

3.2.4.1.3 HANGAR AND BERTHING REQUIREMENTS - OTV SERVICING/MAINTENANCE FACILITY (CONCEPT 2)

The second concept we developed added a high bay area to the cylindrical hangar to facilitate removal/replacement operations. We also added storage areas above the hangar for spare aerobrakes, engines, tanks, etc.

OTV SERVICING/MAINTENANCE FACILITY (CONCEPT 2)

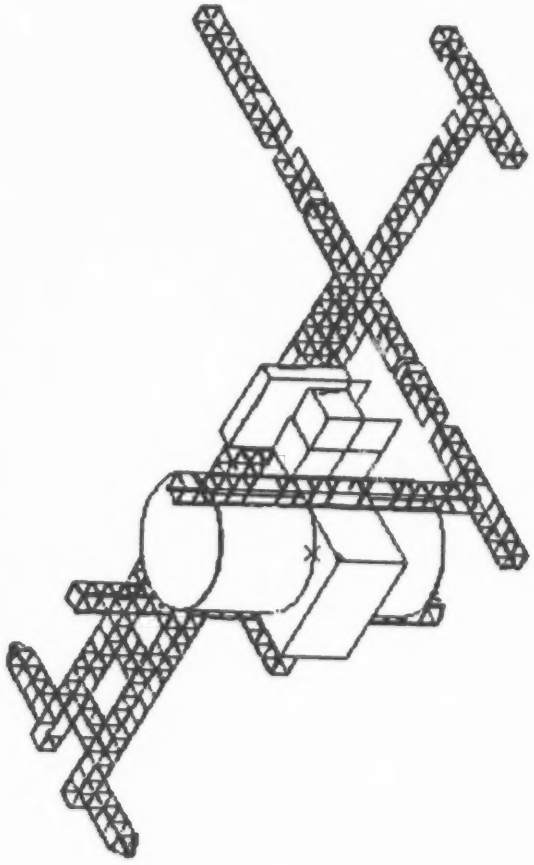

3.2.4.1.3 HANGAR AND BERTHING REQUIREMENTS - OTV SERVICING/MAINTENANCE FACILITY (CONCEPT 2)

This is the view from the opposite end of the concept 2 hangar. Accessibility to the storage areas above the hangar are also shown. On the rail at the bottom of the hangar, we see the translational OTV cradle support.

OTV SERVICING /MAINTENANCE FACILITY (CONCEPT 2)

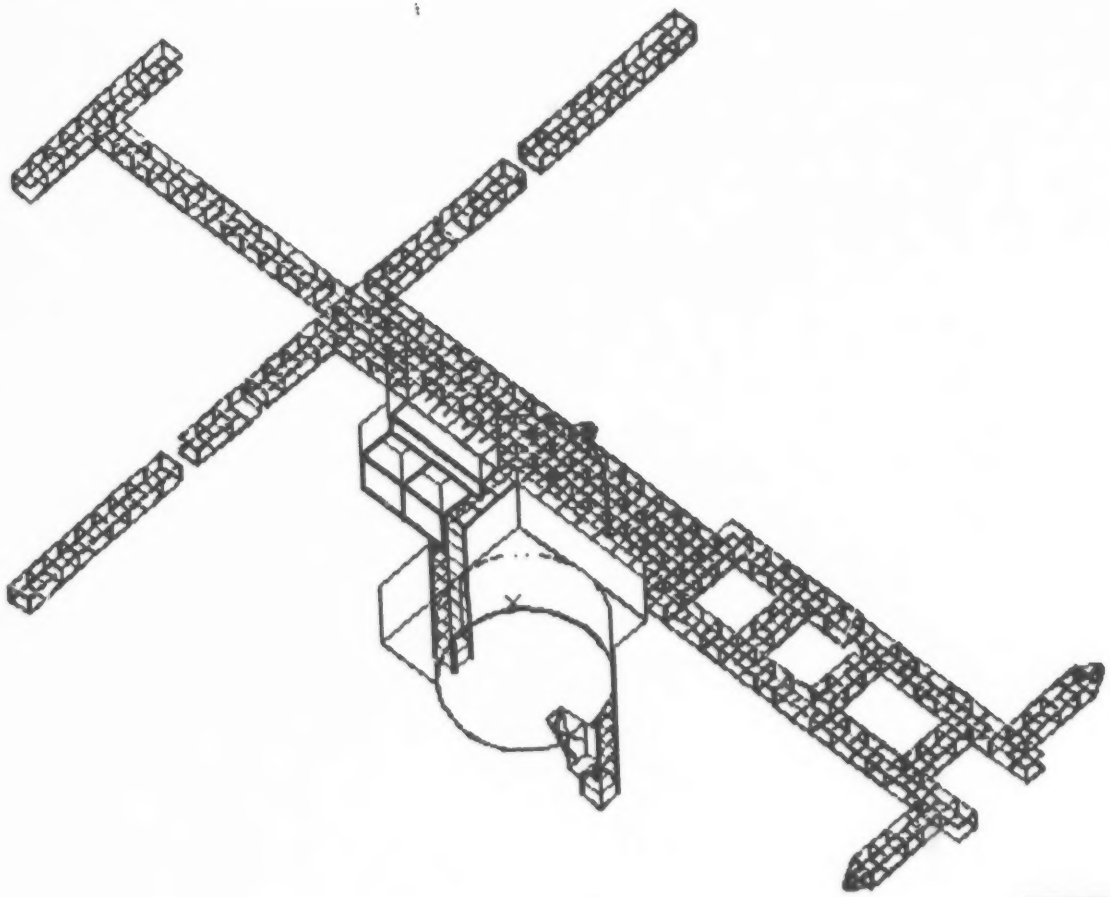

MARTIN MARIETTA

3.2.4.1.3 HANGAR AND BERTHING REQUIREMENTS - OTV SERVICING/MAINTENANCE FACILITY (CONCEPT 2)

A cutaway side view of the concept 2 hangar is shown, with two OTV stages in process. In this instance, the cryo stage is depicted, but the hangar mechanisms and arrangements are also directly applicable to the storable stages. On the forward end of the center OTV stage, the multiple payload delivery configuration is depicted.

OTV SERVICING/MAINTENANCE FACILITY (CONCEPT 2)

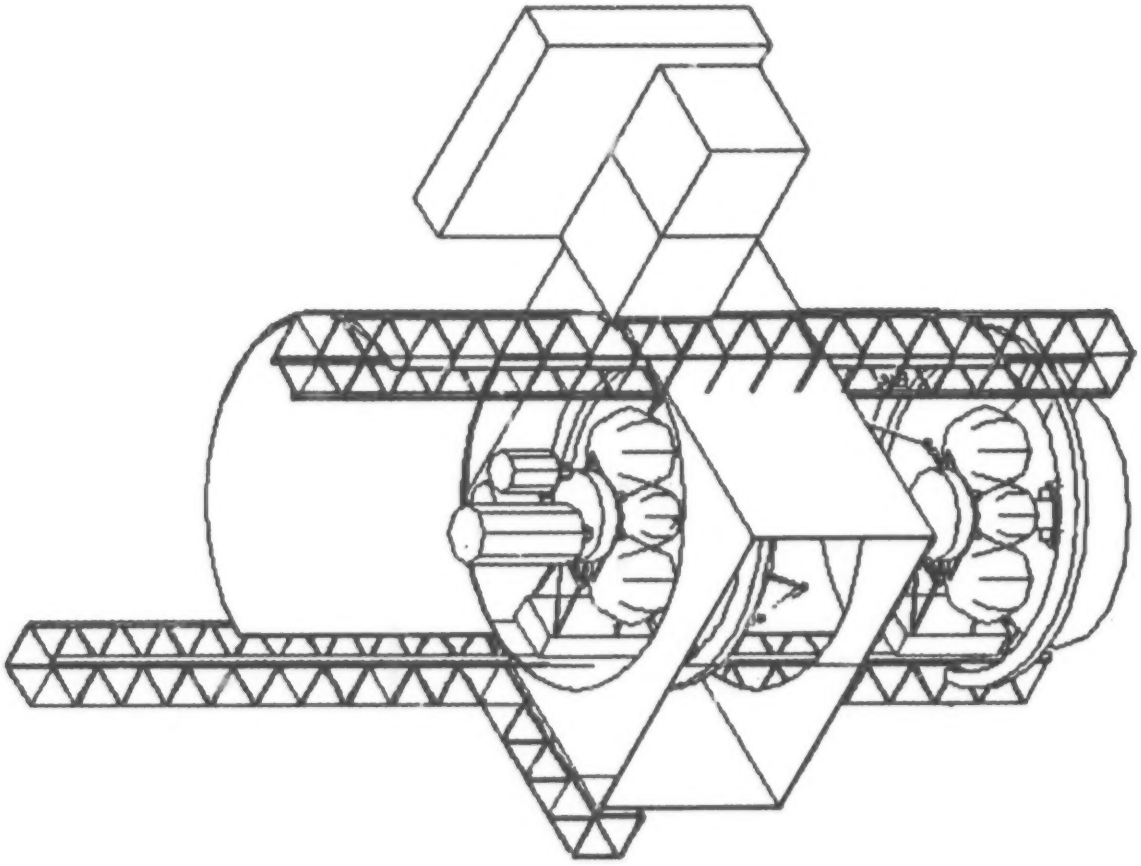

MARTIN MARIETTA

3.2.4.1.3 HANGAR AND BERTHING REQUIREMENTS - OTV SERVICING/MAINTENANCE FACILITY (CONCEPT 2)

A further cutaway side view of the concept 2 hangar is shown, with the shell and high bay areas omitted for clarity. As you can begin to see, in this concept the OTV is maintained in a fixed position and the robotic arms move around the outer circumference.

OTV SERVICING /MAINTENANCE FACILITY (CONCEPT 2)

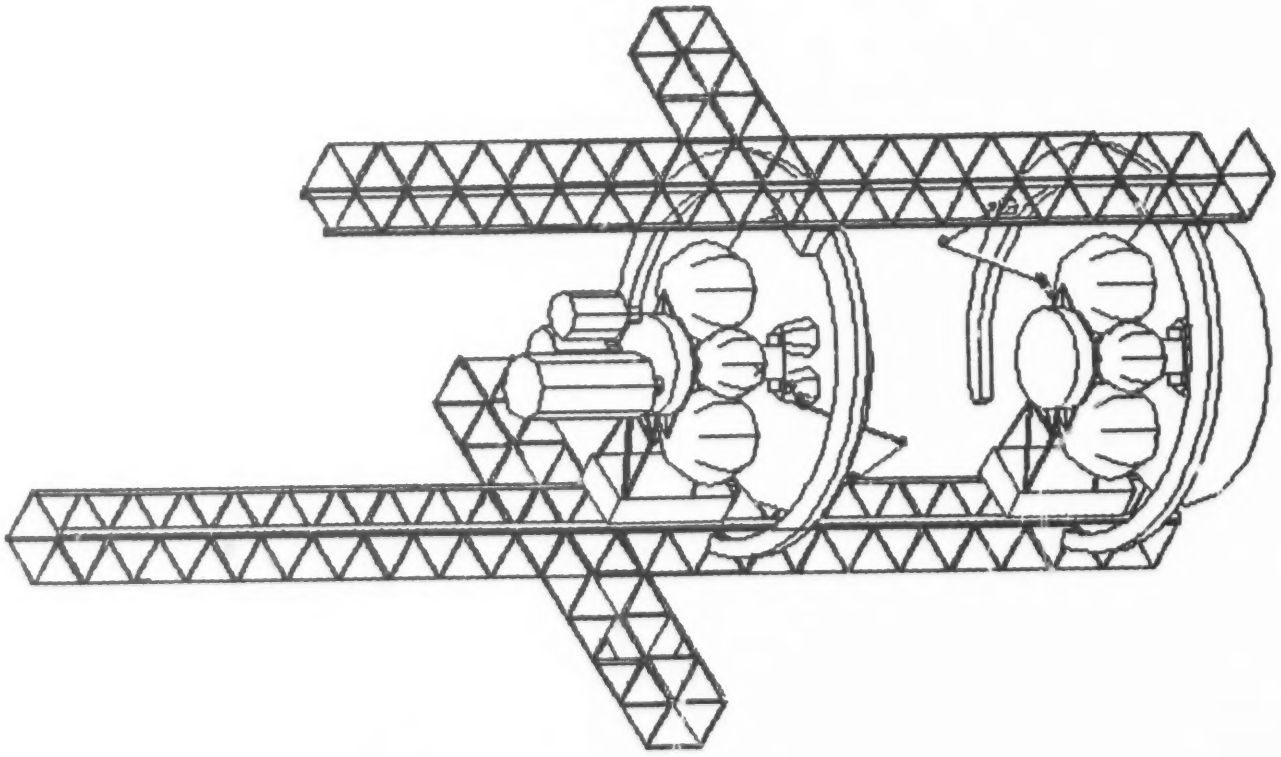

3.2.4.1.3 HANGAR AND BERTHING REQUIREMENTS - OTV SERVICING/MAINTENANCE FACILITY (CONCEPT 2)

A further cutaway side view of the concept 2 hangar is shown.

OTV SERVICING/MAINTENANCE FACILITY (CONCEPT 2)

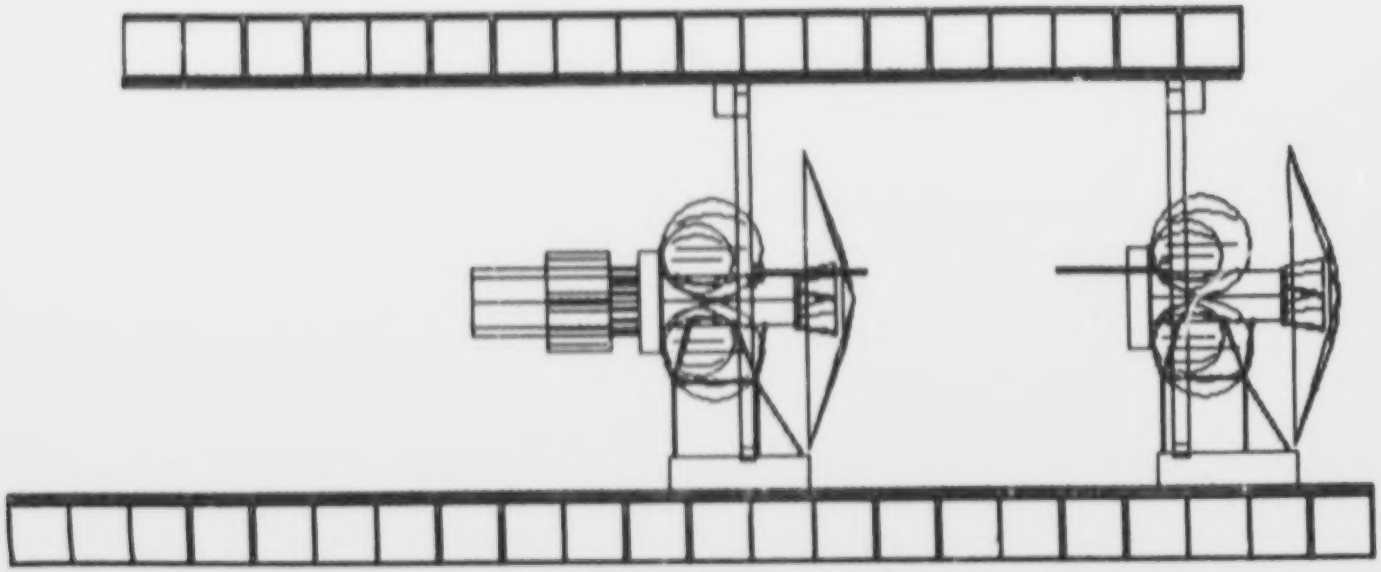

MARTIN MARIETTA

3.2.4.1.3 HANGAR AND BERTHING REQUIREMENTS - OTV SERVICING/MAINTENANCE FACILITY (CONCEPT 2)

In this view of the concept 2 hangar, the OTV stages have been removed so that the translational cradles and moveable robotic arms can be more clearly seen.

OTV SERVICING/MAINTENANCE FACILITY (CONCEPT 2)

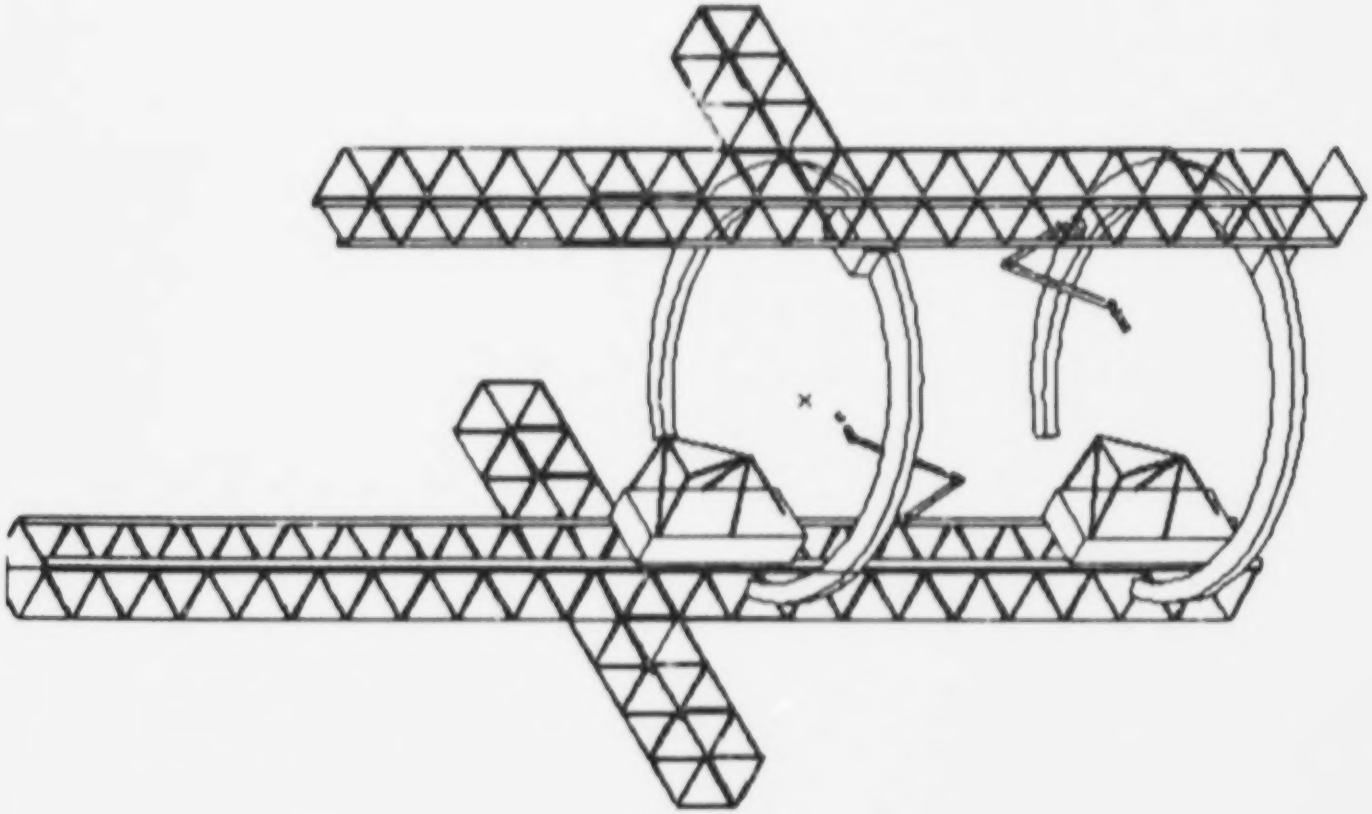

MARTIN MARIETTA

3.2.4.1.3 HANGAR AND BERTHING REQUIREMENTS - OTV SERVICING/MAINTENANCE FACILITY (CONCEPT 3)

In this concept, we used the same basic configuration as before, with cylindrical outer sections and an added high bay, and addressed such problems as door mechanisms and storage internal to the hangar.

OTV SERVICING /MAINTENANCE FACILITY (CONCEPT 3)

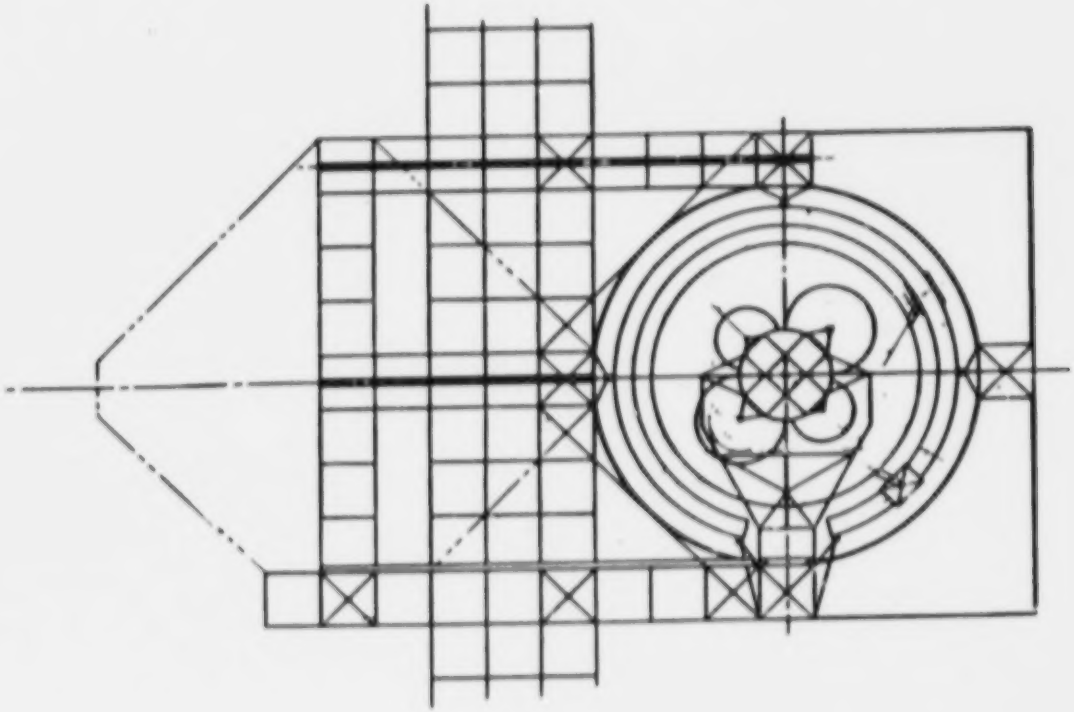

MARTIN MARIETTA

3.2.4.1.3 HANGAR AND BERTHING REQUIREMENTS - OTV SERVICING/MAINTENANCE FACILITY (CONCEPT 3)

In this side view of the concept 3 hangar, the various manipulator and RMS-type arms are shown, with the large RMS atop the hangar used to move large subsystems and systems in and out of the processing area. A concept that was investigated involved the prelaunch scenario where the OMV/OTV/Payload stack is translated out of the hangar, the door is closed, the cradle then reversed moving the stack backward, latching it to the door. Inside the door were pneumatic valves capable of imparting one to two feet per second. The cradle supports were dropped, and the stack was launched along the Space Station negative velocity vector. As will be seen later, this was not the finally selected prelaunch/launch scenario.

OTV SERVICING/MAINTENANCE FACILITY (CONCEPT 3)

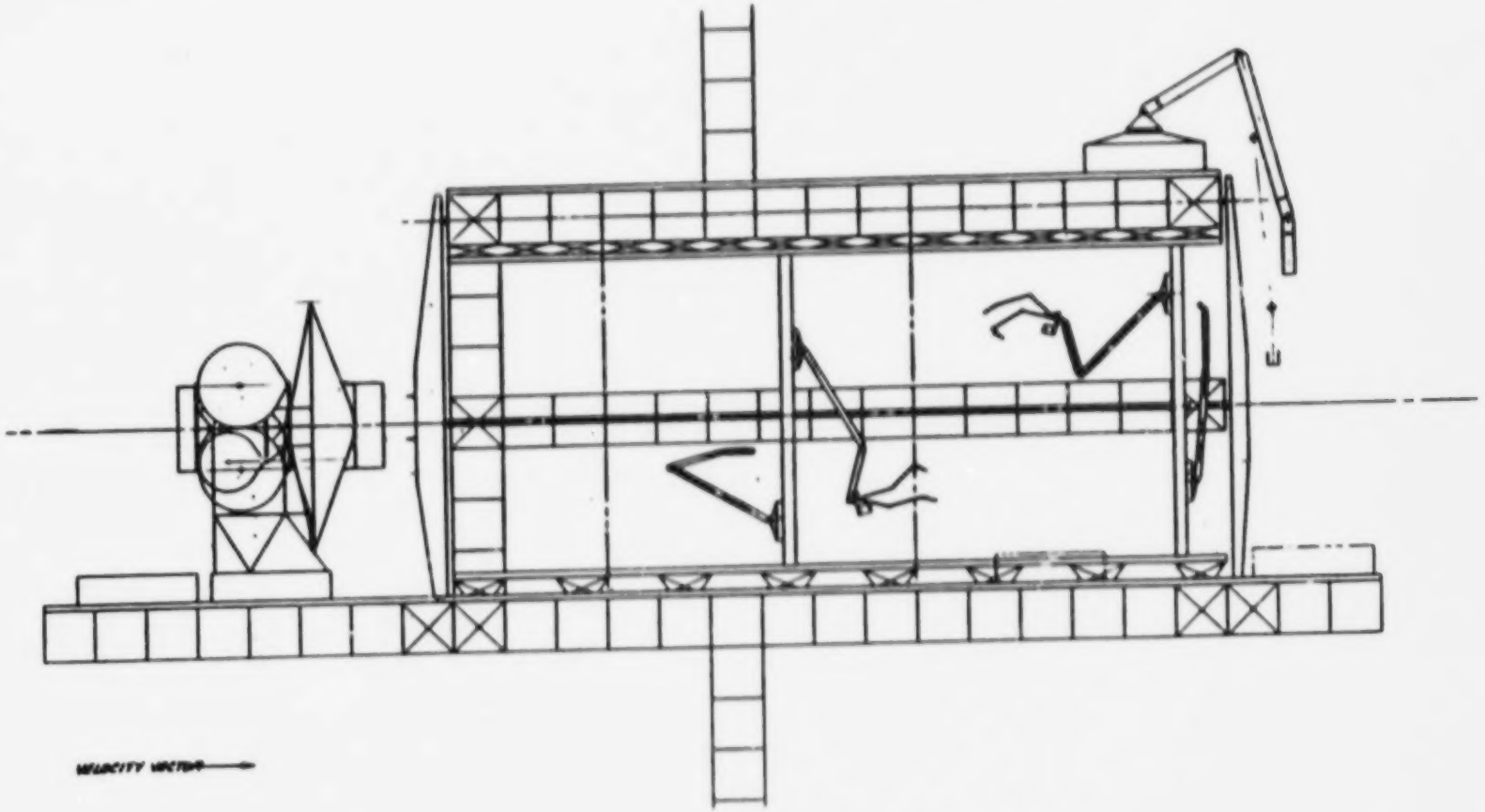

MARTIN MARIETTA

3.2.4.1.3 HANGAR AND BERTHING REQUIREMENTS - OTV SERVICING/MAINTENANCE FACILITY (CONCEPT 3)

A front view of the concept 3 hangar, with the OTV stages and robotic arms excluded, showing storage areas for subsystems in the high bay.

OTV SERVICING/MAINTENANCE FACILITY (CONCEPT 3)

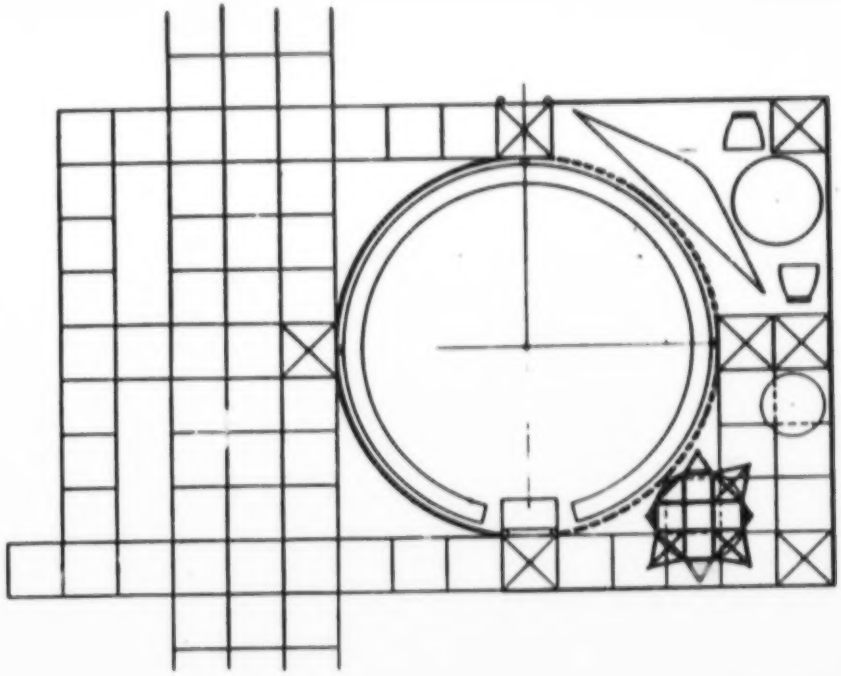

3.2.4.1.3 HANGAR AND BERTHING REQUIREMENTS - OTV SERVICING/MAINTENANCE FACILITY (CONCEPT 3)

A side view of the concept 3 hangar, with the storage areas within the high bay, is shown.

OTV SERVICING/MAINTENANCE FACILITY (CONCEPT 3)

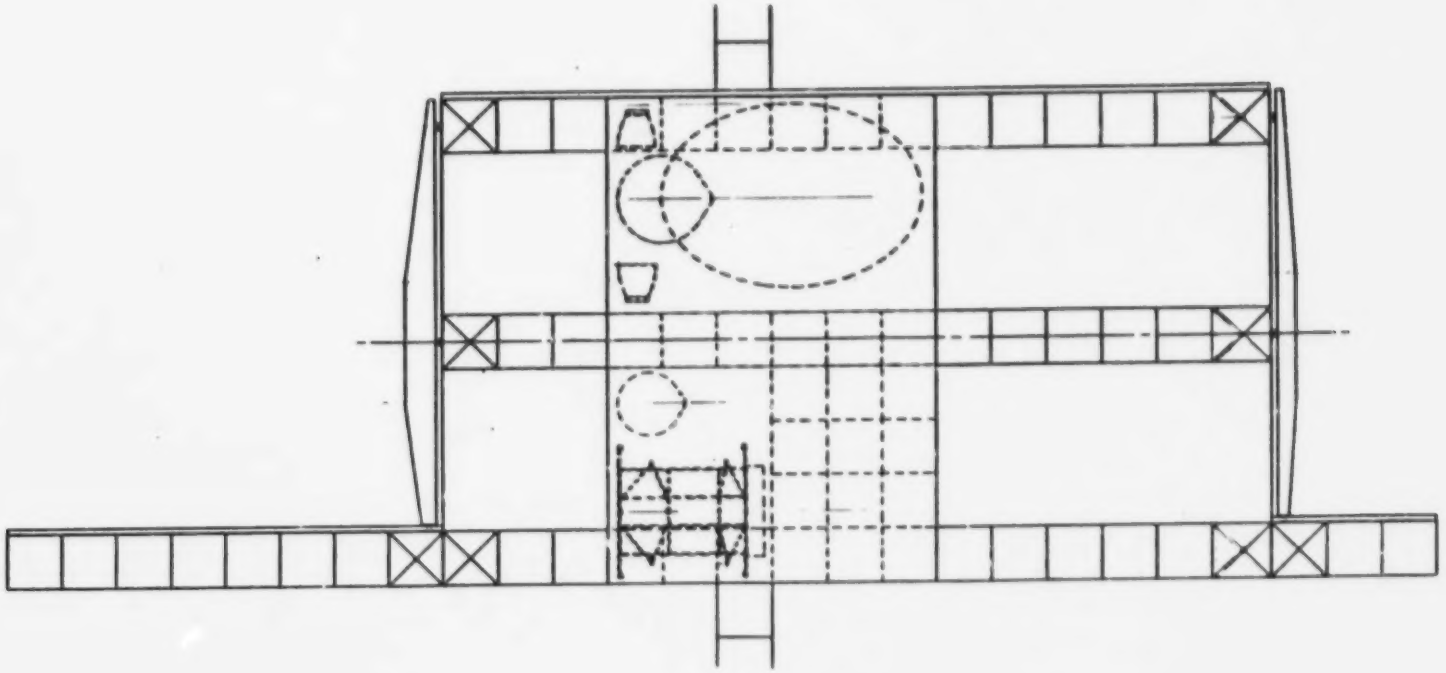

MARTIN MARIETTA

3.2.4.1.3 HANGAR AND BERTHING REQUIREMENTS - SPACE STATION FOC HANGAR LOCATION

Shown is the concept 4 hangar adapted to the Space Station FOC configuration. The cross-hatched box indicates the previously identified OTV servicing hangar. To place the new hangar in this position requires moving the large communications antenna up to the Space Station cross beam.

Further definition of the selected concept 4 hangar configuration is provided in Paragraph 3.3.2 (Hangar Configuration).

SPACE STATION FOC HANGAR LOCATION

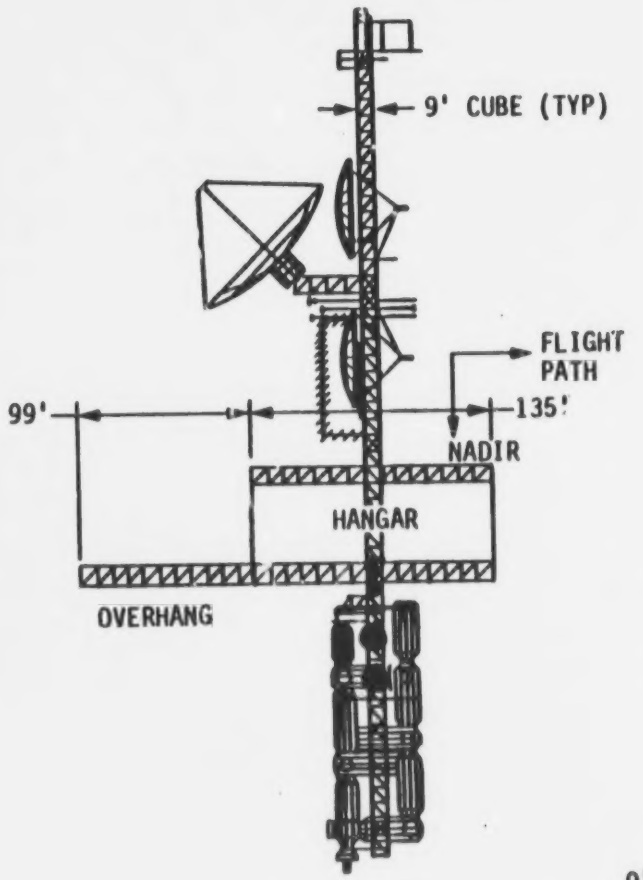

SIDE VIEW

0' 50'

SCALE

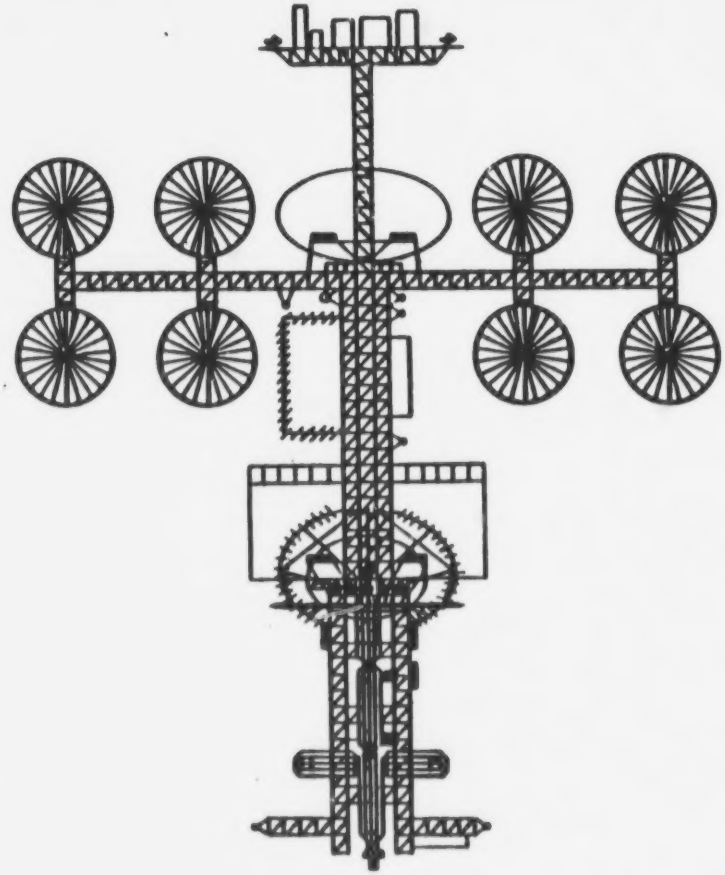

FRONT VIEW

MARTIN MARIETTA

3.2.4.1.4 SPACE STATION CREW LIMITATIONS

We determined that under current Space Station ground rules, each crewperson will work five 12-hour shifts per week, with two full days off. The Space Station will be operational 7 days per week, 24 hours per day. The current rules for EV activity in an unpressurized volume requires two EV astronauts ("buddy system") and one IV crewperson to monitor the activity. The facing page chart shows the average watch crew on duty for varying total crew sizes. The six person crew size corresponds to the Space Station IOC configuration, which grows to 8 people between IOC and FOC, and culminates in a 12-person crew at FOC per current thinking. The purpose of this chart is to show what happens to the watch crew during periods of extensive EVA. Obviously, the watch crew cannot be negative or less than one, which means careful duty planning around EVA.

At FOC, the net crew available for other duties, after planning for EVA, is very minimal. These other duties include station upkeep, material processing, life sciences, OMV maneuvering and control, Shuttle docking, etc. The obvious conclusion is that use of EVA for OTV servicing and maintenance must be kept to the barest minimum; not because the crew isn't capable, but there simply aren't enough of them.

SPACE STATION CREW LIMITATIONS

CURRENTLY UNDERSTOOD GROUNDRULES

- EACH CREWPERSON WORKS FIVE 12 HOUR SHIFTS/WEEK
- SPACE STATION OPERATES 7 DAYS/WEEK, 24 HOURS/DAY
- EVA REQUIRES 2 EV + 1 IV ASTRONAUTS

CREW SIZE	WATCH CREW	EVA CREW	NET CREW FOR OTHER ACTIVITIES
6	2.14	3	-0.86
8	2.86	3	-0.14
10	3.57	3	0.57
12	4.29	3	1.29
14	5.00	3	2.00
16	5.71	3	2.71
18	6.43	3	3.43

3.2.4.1.5 PRESSURIZED MAINTENANCE AREA REQURIEMENTS

Analysis of the OTV configuration indicates there are two subsystems that require periodic calibration at the Space Station, the star scanner and ring laser gyro. The antenna system (GPS and S-band) also requires some periodic testing, but it was felt that this could be performed as a part of mission operations during return to Space Station.

Our evaluation of these calibration requirements indicates that they can be satisfied internally through testing, in-flight stellar updates, and a tie-in to the Space Station inertial reference unit.

As seen by the previous chart, it would appear that crew limitations would preclude any sort of extensive OTV equipment maintenance and so our conclusion is that no OTV pressurized maintenance area requirements currently exist.

PRESSURIZED MAINTENANCE AREA REQUIREMENTS

- SBOTV HAS TWO SUBSYSTEMS REQUIRING PERIODIC CALIBRATION
  - STAR SCANNER
  - RING LASER GYRO (RLG)
- ANALYSIS INDICATES CALIBRATION COULD BE PERFORMED USING STELLAR UPDATES, INTERNAL TESTS, AND A TIE-IN TO THE SPACE STATION INERTIAL REFERENCE UNIT.
- SPACE STATION CREW LIMITATIONS PRECLUDE EXTENSIVE OTV EQUIPMENT MAINTENANCE
- NO OTV PRESSURIZED MAINTENANCE AREA REQUIREMENTS

3.2.4.2 SPACE STATION/SPACE BASED OTV FUNCIIONAL FLOW OVERVIEW

OTV processing at Space Station can be divided into two major categories; i.e., OTV processing and assembly operations, and support operations. These categories are further subdivided into major functional areas to allow development of detailed OTV processing procedures and timelines. These procedures and timelines were used to derive the specific Space Station accommodations necessary to support OTV activities.

Our overall objective was to limit the impact of OTV processing requirements on Space Station operations, involvement of crew, and associated crew training and skill requirements. Our operational concept envisions the maximum use of automated and robotic systems to perform all the required OTV maintenance and servicing tasks; only critical activities that could pose a danger to the Space Station, OTV, payload, or OMV would require direct crew involvement/supervision.

By taking this approach, we can effectively meet the projected FOC Space Station crew manning requirements without jeopardizing the accomplishment of other Space Station activities during OTV pre- and postmission processing.

Complete functional flows have also been prepared for each of the major functional areas and are published in Appendix A to Volume IV.

SBOTV FUNCTIONAL FLOW - OVERVIEW

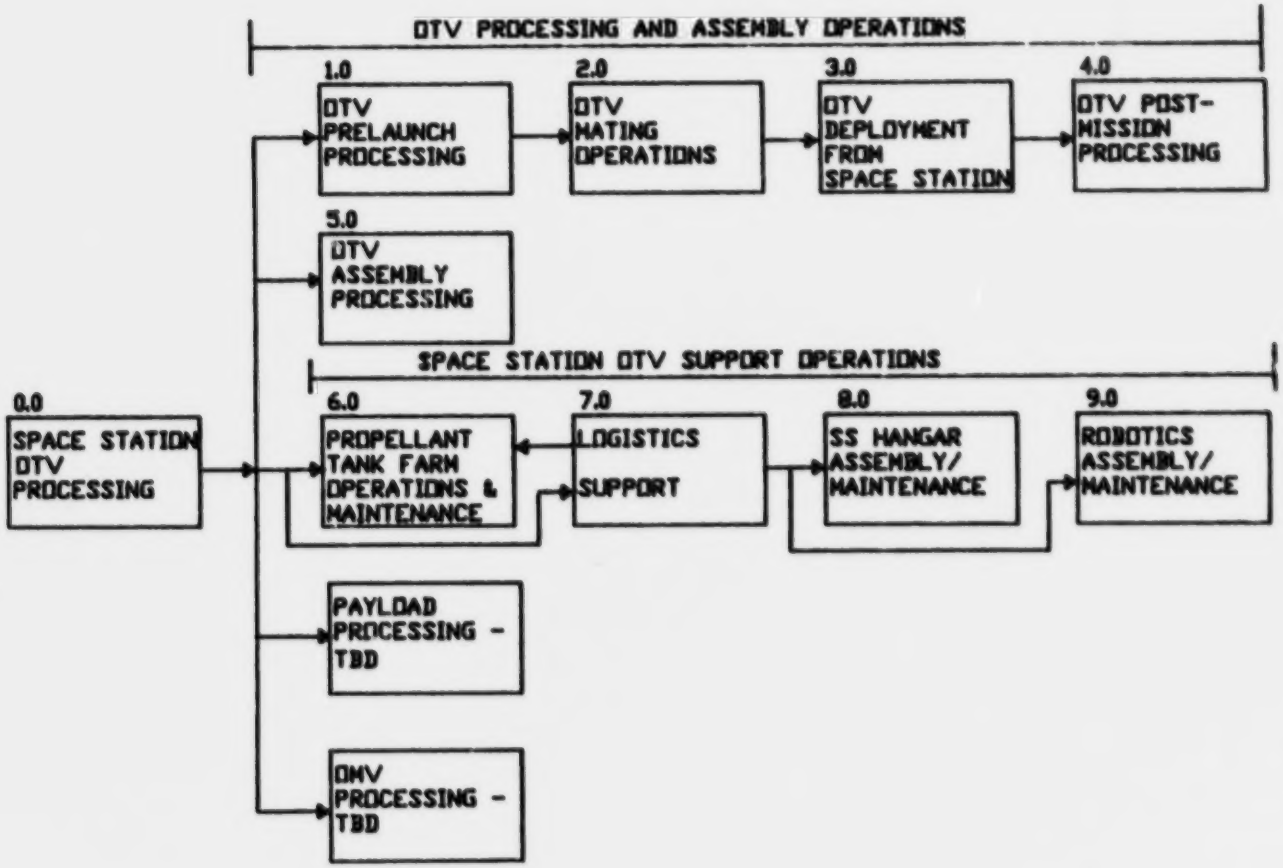

MARTIN MARIETTA

3.2.5 SPACE STATION/SPACE-BASED OTV FUNCTIONAL REQUIREMENTS

From the functional flow analyses performed, we developed a set of functional requirements for the Space-Based OTV at Space Station. For presentation purposes, we broke these functional requirements down into operational phases: Initial Delivery, Initial Assembly, Storage, Prelaunch Processing, Launch Processing, Retrieval, Postmission Processing, Servicing and Maintenance, and Logistics Support.

The facing page chart summarizes functional requirements for the Initial Delivery and Initial Assembly operational phases. Pictorial representations of various aspects of these phases are presented on the following four charts.

SBOTV/SPACE STATION FUNCTIONAL REQUIREMENTS

0 **INITIAL DELIVERY**

- TRANSLATE DISASSEMBLED SBOTV FROM SHUTTLE BAY TO STORAGE FACILITY

0 **INITIAL ASSEMBLY**

- PROVIDE METEOROID AND THERMAL PROTECTION DURING INITIAL ASSEMBLY OPERATIONS
- REMOVE SBOTV ORUs FROM STOWAGE
- UNFOLD AEROBRAKE
- ASSEMBLE SBOTV
- CHECKOUT ASSEMBLED SBOTV
- STOW ASSEMBLED SBOTV

3.2.5 SPACE STATION/SPACE-BASED OTV FUNCTIONAL REQUIREMENTS - INITIAL DELIVERY

The facing page chart shows initial delivery of the disassembled Space-Based OTV to Space Station. As indicated, all subsystems will fit into the Orbiter Payload Bay, and delivery in essence will require two equivalent Shuttle flights. In that the dry weight of the SBOTV is on the order of 8000 lbs, we do not advocate delivery in two flights; rather, SBOTV subsystem delivery should be manifested across a larger number of Shuttle flights to optimize weight and volume deliveries to Space Station.

SBOTV INITIAL DELIVERY

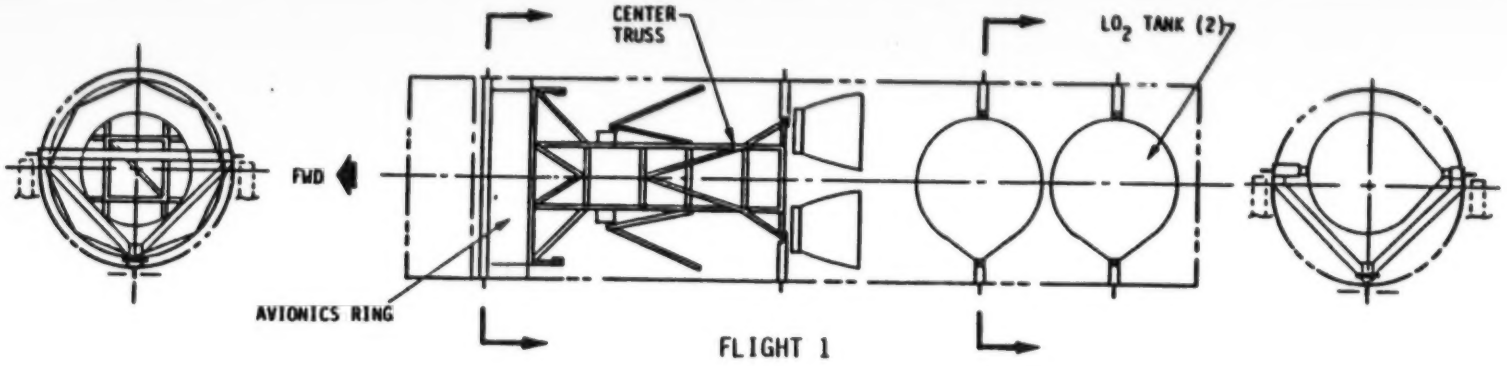

FLIGHT 1

PLAN VIEWS OF ORBITER BAY

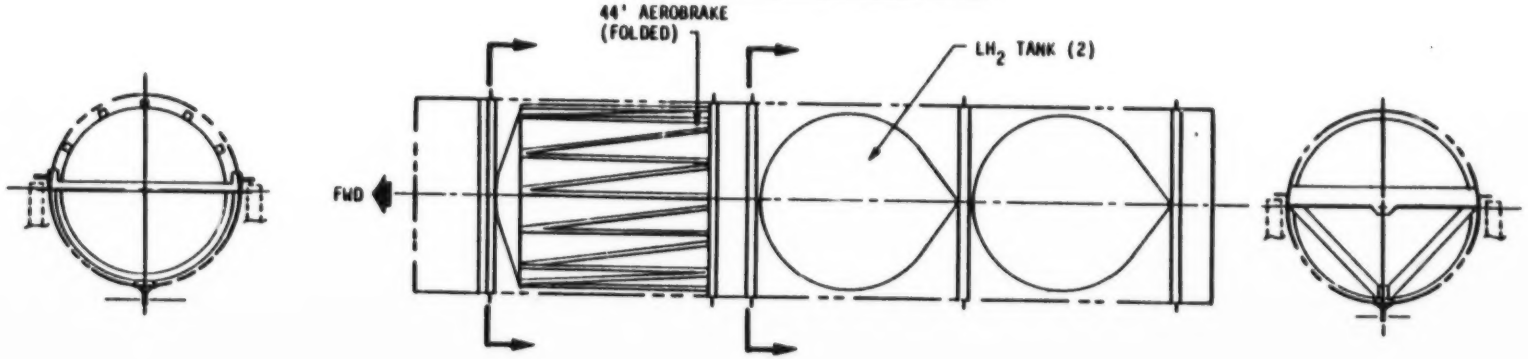

FLIGHT 2

MARTIN MARIETTA

3.2.5 SPACE STATION/SPACE-BASED OTV FUNCTIONAL REQUIREMENTS - INITIAL ASSEMBLY (SIDE VIEW)

In the initial assembly sequence, the SBOTV ORUs are removed from stowage and placed in the servicing and maintenance hangar. The folded tank trusses on the core structure are deployed by a robotic arm, and the structure is installed in the cradle carriage. The large liquid hydrogen and oxygen tanks and the aerobrake are installed, again all by robotic arms.

SBOTV INITIAL ASSEMBLY (SIDE VIEW)

1. DEPLOY TANK TRUSSES (8)
2. INSTALL CORE STRUCTURE IN BERTHING CRADLE

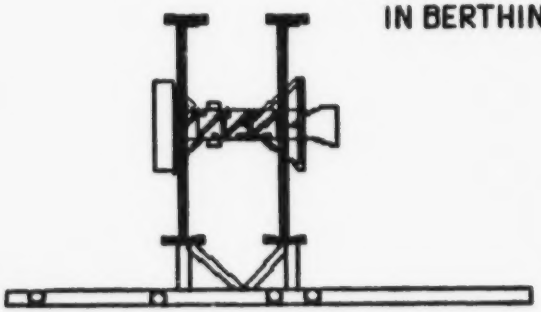

3. INSTALL HYDROGEN TANKS (2)

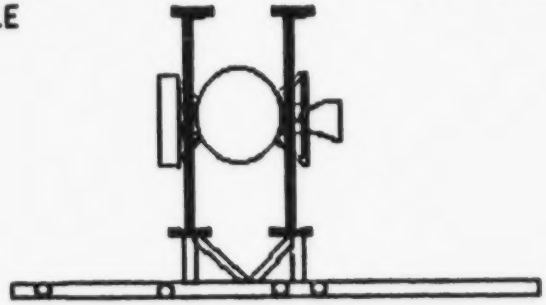

4. INSTALL OXYGEN TANKS (2)

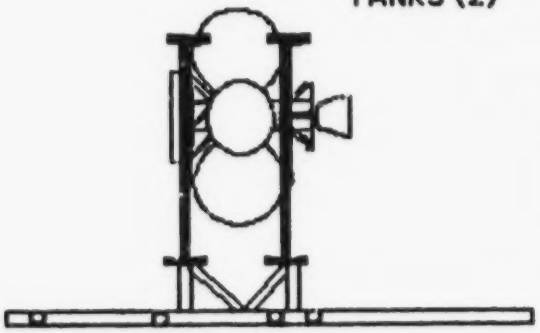

5. INSTALL AEROBRAKE

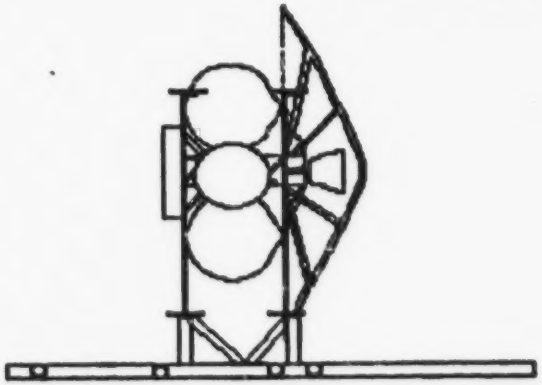

3.2.5 SPACE STATION/SPACE-BASED OTV FUNCTIONAL REQUIREMENTS - INITIAL ASSEMBLY (END VIEW)

This is the end view of the initial assembly sequence described on the previous chart. Of interest are the dimensions shown; the largest diameter of the basic stage, across the liquid hydrogen tanks, approximates 36 feet, while the unfolded aerobrake is 44 feet in diameter.

SBOTV INITIAL ASSEMBLY (END VIEW)

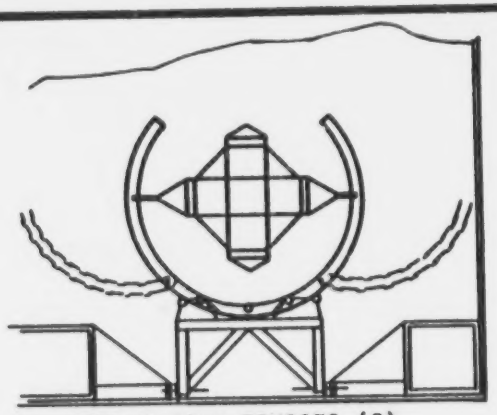

1. DEPLOY TANK TRUSSES (8)
2. INSTALL CORE STRUCTURE IN BERTHING CRADLE

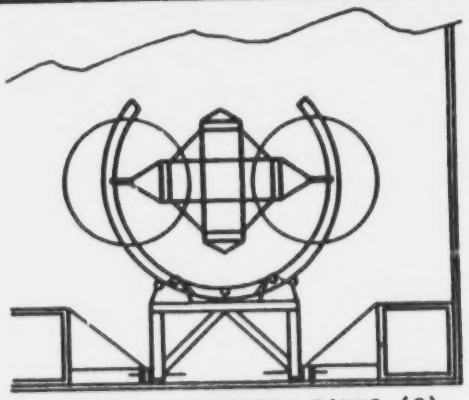

3. INSTALL HYDROGEN TANKS (2)

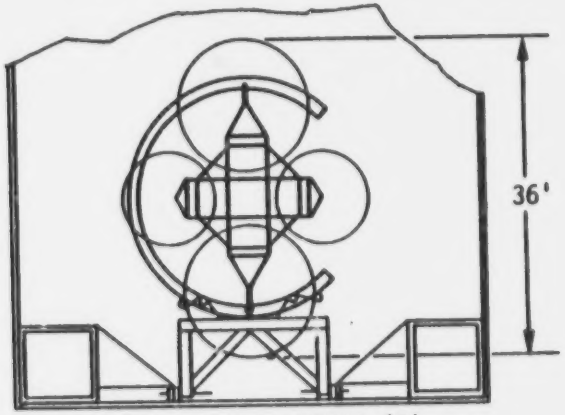

4. INSTALL OXYGEN TANKS (2)

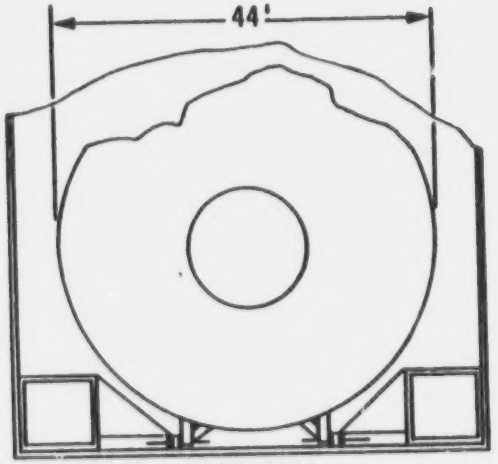

5. INSTALL AEROBRAKE

3.2.5 SPACE STATION/SPACE-BASED OTV FUNCTIONAL REQUIREMENTS - INITIAL ASSEMBLY CHECKOUT

Once the SBOTV has been fully assembled, an initial checkout is performed. This checkout verifies tank installations, mechanical and fluid connections, aerobrake integrity, and avionics and propulsion control.

SBOTV INITIAL CHECKOUT

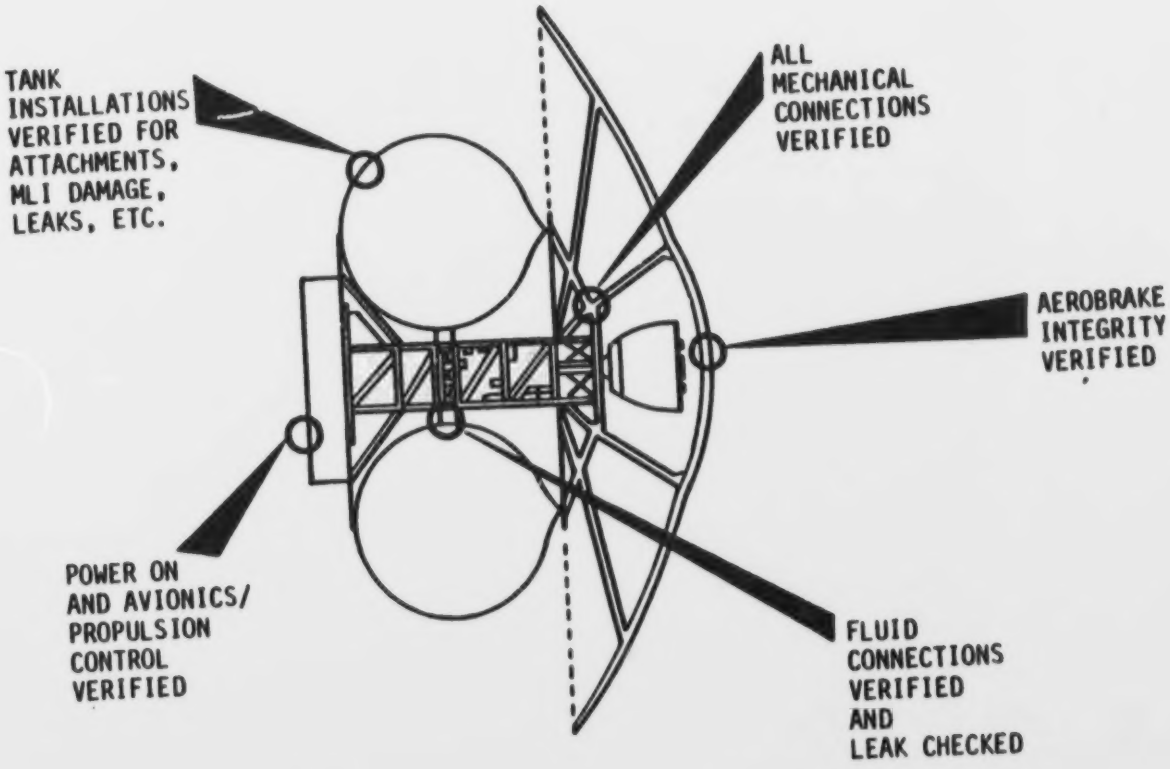

MARTIN MARIETTA

3.2.5 SPACE STATION/SPACE-BASED OTV FUNCTIONAL REQUIREMENTS (CONTINUED)

Storage requirements for SBOTV stages and ORU spares will have significant impact upon Space Station, especially in the later years of the nominal mission when two 81K stages are needed for the Lunar Delivery Mission. Recognize that the vast majority of time spent by the SBOTV onorbit will be in storage. More specific definition of the volumetric requirements for storage is provided later in this volume under the Initial Space Station Requirements Section, paragraph 5.2.7. Storage locations within the servicing and maintenance hangar are shown in Paragraph 3.3.2.

SBOTV/SPACE STATION FUNCTIONAL REQUIREMENTS (CONTINUED)

- **STORAGE**
  - PROVIDE METEOROID AND THERMAL PROTECTION FOR SBOTV ORUs AND STAGES DURING STORAGE
  - PROVIDE STOWAGE FOR SBOTV STAGES
    - 55K SINGLE STAGE
    - 81K FIRST STAGE (***NOMINAL MODEL ONLY***)
    - 81K SECOND STAGE (***NOMINAL MODEL ONLY***)
  - MONITOR STOWED SBOTV STAGES
    - 55K SINGLE STAGE
    - 81K FIRST STAGE (***NOMINAL MODEL ONLY***)
    - 81K SECOND STAGE (***NOMINAL MODEL ONLY***)
  - PROVIDE STOWAGE FOR SPARE SBOTV ORUs
  - MONITOR STOWED SPARE SBOTV AVIONICS ORUs
  - PROVIDE STOWAGE FOR FAILED / DEGRADED SBOTV ORUs

3.2.5 SPACE STATION/SPACE-BASED OTV FUNCTIONAL REQUIREMENTS (CONTINUED)

During prelaunch processing, payload and OMV integration operations are performed, as well as SBOTV propellant resupply. The following two charts address specific aspects of the prelaunch processing scenario.

SBOTV/SPACE STATION FUNCTIONAL REQUIREMENTS

- **PRELAUNCH PROCESSING**

  - PROVIDE METEOROID AND THERMAL PROTECTION DURING PRELAUNCH PROCESSING
  - REMOVE SBOTV FROM STOWAGE
  - INSTALL SBOTV IN CRADLES
  - PERFORM SBOTV CHECKOUT
  - TRANSLATE PAYLOAD TO INTEGRATION FACILITY
  - INSTALL PAYLOAD IN CRADLES
  - INTEGRATE PAYLOAD AND SBOTV
  - PERFORM PAYLOAD AND SBOTV CHECKOUT
  - TRANSLATE OMV TO INTEGRATION FACILITY
  - INTEGRATE OMV AND SBOTV
  - PERFORM OMV/PAYLOAD/SBOTV CHECKOUT
  - RESUPPLY SBOTV PROPELLANT

3.2.5 SPACE STATION/SPACE-BASED OTV FUNCTIONAL REQUIREMENTS - HANGAR UMBILICAL CONCEPTS

One of the concepts we developed under Task 5 provides mating of the power and signal umbilicals by including the connection in the carriage arm. As the arm is swung up to engage the SBOTV carriage interfaces, the umbilical connection is made, as shown on the left side of the facing page chart.

Our concept for propellant resupply and detanking is shown on the right side of the chart. We understand that, for cryogenic fluids, the swivel connection required for the concept shown is a simpler technology problem than development of flexible, long-life hoses.

SBOTV / HANGAR UMBILICAL CONCEPTS

TRANSPORTER CARRIAGE UMBILICAL CONNECTOR

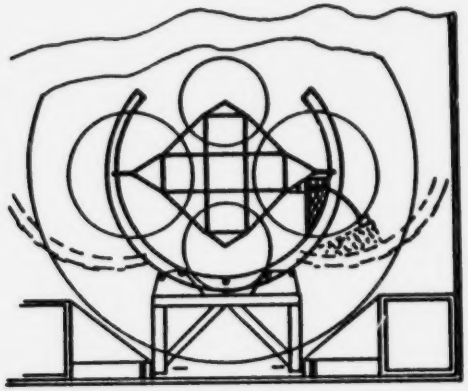

ENGAGEMENT OF CARRIAGE ARM WITH VEHICLE SUPPORT PIN COMPLETES UMBILICAL CONNECTION

OTV PROPELLANT UMBILICALS

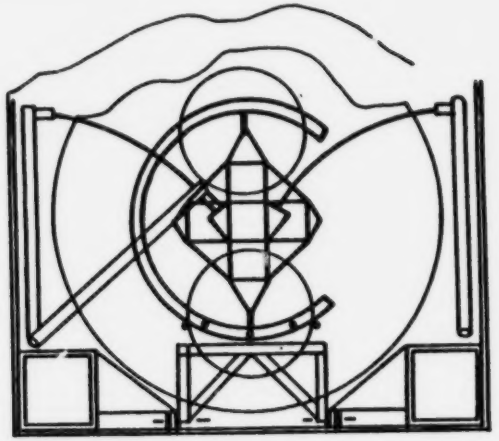

PROPELLANT UMBILICALS STOWED ON HANGAR WALL SWING & DOWN TO ENGAGE VEHICLE FILL CONNECTOR (OXYGEN TANKS REMOVED FOR CLARITY)

3.2.5 SPACE STATION/SPACE-BASED OTV FUNCTIONAL REQUIREMENTS - PAYLOAD/OMV/SBOTV MATING AND CHECKOUT

In the scenario developed, once the SBOTV has been installed in the cradle carriage and checked out, the payload is moved from its storage area by the MRMS, which in turn hands the payload off to the space crane or a robotic arm. The crane (or arm) places the payload in the payload cradle carriage, and very slowly and carefully, under positive control, the carriage is moved toward the SBOTV until mating is accomplished. After mating, checkout of the payload and the SBOTV is again performed to verify connections and that no damage has occurred.

Once checkout has been completed, the OMV is moved from its storage area by the MRMS, which in turn hands off the OMV to a robotic arm. The arm places the OMV at the aft end of the aerobrake allowing mating to occur. An OMV umbilical is mated with the OMV, and the entire vehicle stack is checked out.

PAYLOAD/OMV/ SBOTV MATING & CHECKOUT

A. PAYLOAD/OTV MATING

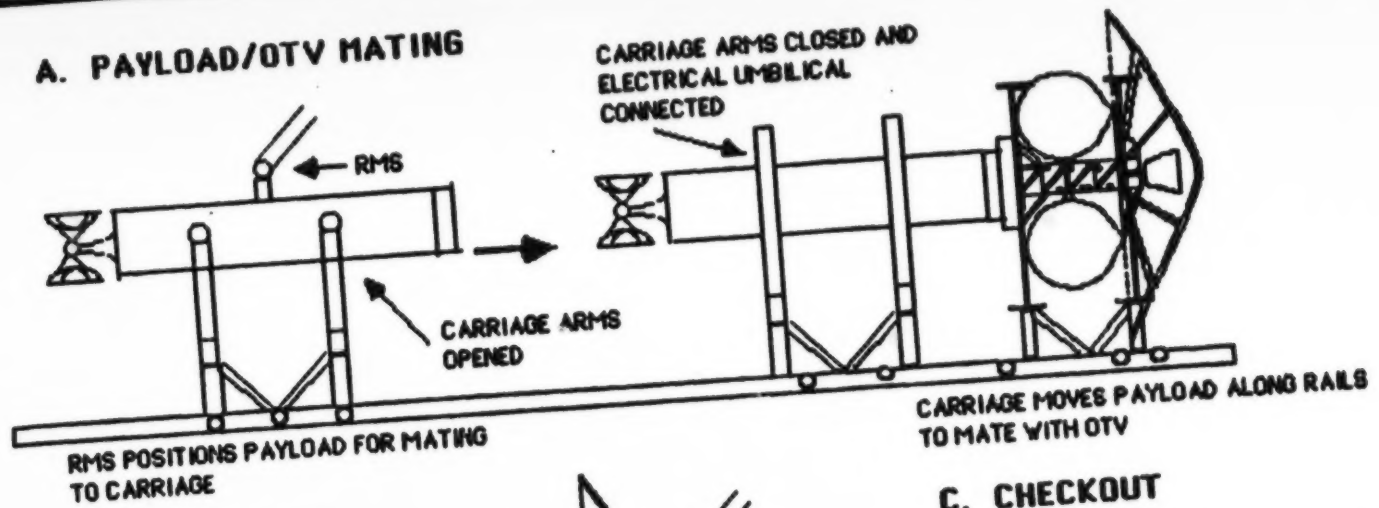

B. OMV/OTV MATING

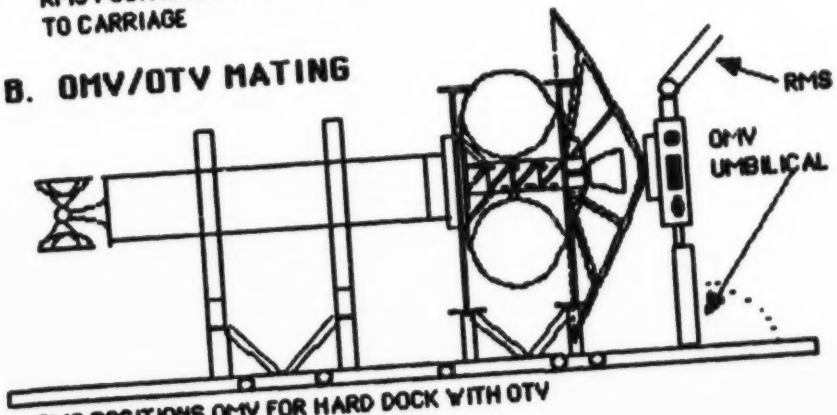

C. CHECKOUT

1. OTV/PAYLOAD CONNECTED TO OTV CONTROL CONSOLE THROUGH UMBILICALS
2. OTV CONTROL AND PAYLOAD TM VIA OTV VERIFIED
3. OMV MONITORED VIA UMBILICAL (TO HANGAR)

3.2.5 SPACE STATION/SPACE-BASED OTV FUNCTIONAL REQUIREMENTS (CONTINUED)

The functional requirements for the operational phases of launch processing, retrieval, and postmission processing are shown on the facing page chart. The following three charts address specific aspects of these phases.

SBOTV/SPACE STATION FUNCTIONAL REQMTS (CONT.)

- **LAUNCH PROCESSING**
  - TRANSLATE OMV/SBOTV/PAYLOAD STACK TO DEPLOYMENT PORCH
  - ENGAGE CRADLE-TO-OMV DEPLOYMENT LATCHES
  - DEPLOY VEHICLE STACK

- **RETRIEVAL**
  - RETRIEVE OMV/SBOTV/PAYLOAD STACK
  - PLACE VEHICLE STACK IN CRADLES

- **POSTMISSION PROCESSING**
  - PROVIDE METEOROID AND THERMAL PROTECTION DURING POSTMISSION PROCESSING
  - DETANK SBOTV
  - DEMATE OMV FROM SBOTV
  - TRANSLATE OMV TO OMV PROCESSING FACILITY
  - DEMATE PAYLOAD FROM SBOTV
  - TRANSLATE PAYLOAD TO PAYLOAD PROCESSING FACILITY

3.2.5 SPACE STATION/SPACE-BASED OTV FUNCTIONAL REQUIREMENTS - LAUNCH

In the launch scenario, the cradle carriages move the vehicle stack to the edge of the deployment porch. Note that deployment is accomplished in the Space Station negative velocity vector. The space crane picks up the vehicle stack, and the cradle carriages are partially retracted inside the hangar. The space crane lowers the vehicle stack, allowing deployment latches mounted on the external side of the nearest cradle carriage to be engaged with latch pins on the OMV. The space crane is retracted and the carriages are again moved toward the deployment porch, imparting 1 to 2 fps of momentum to the vehicle stack. As the stack nears the end of the deployment porch, the deployment latches are disengaged and the vehicle stack is deployed.

SBOTV LAUNCH

A. VEHICLE STACK MOVED TO DEPLOYMENT PORCH →

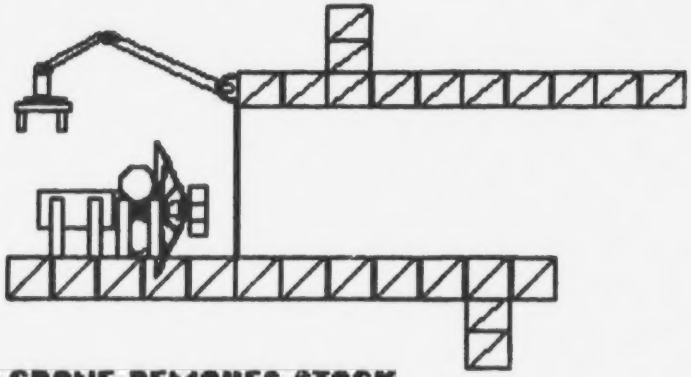

B. SPACE CRANE REMOVES STACK FROM CABLES/CABLES PARTIALLY RETRACTED ←

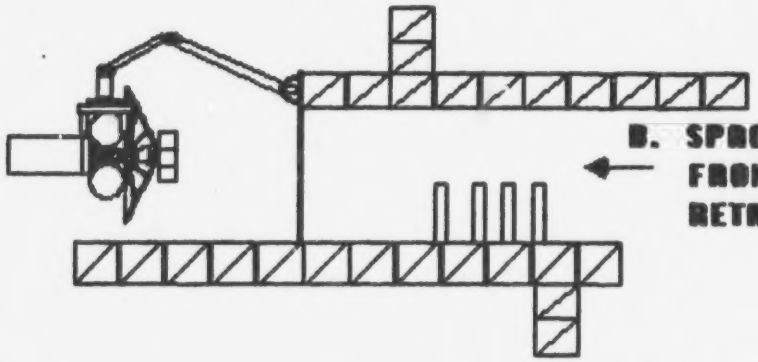

SPACE STATION VELOCITY VECTOR →

C. OMV/CABLE DEPLOYMENT LATCHES ENGAGED/SPACE CRANE RETRACTED/ CABLES FULLY RETRACTED/CABLES IMPART 1-2 FPS TO VEHICLE STACK/ DEPLOYMENT LATCHES DISENGAGED NEAR END OF PORCH →

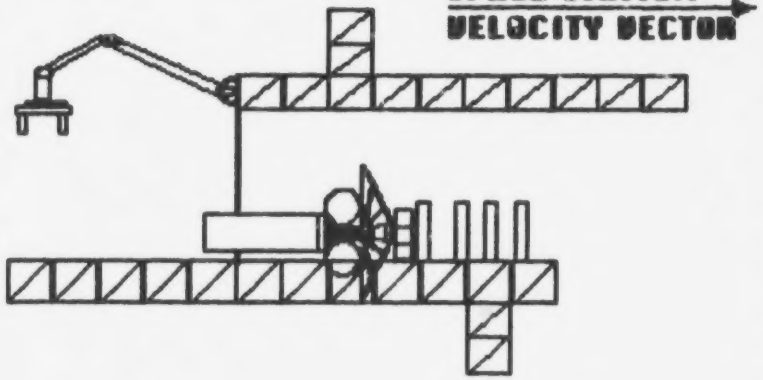

MARTIN MARIETTA

3.2.5 SPACE STATION/SPACE-BASED OTV FUNCTIONAL REQUIREMENTS - RETRIEVAL & BERTHING

In the retrieval scenario, the vehicle stack is captured along the Space Station positive velocity vector. The stack is then rotated for insertion into the hangar. The next chart continues this scenario.

SBOTV RETRIEVAL & BERTHING

A. SPACE CRANE RETRIEVES VEHICLE STACK

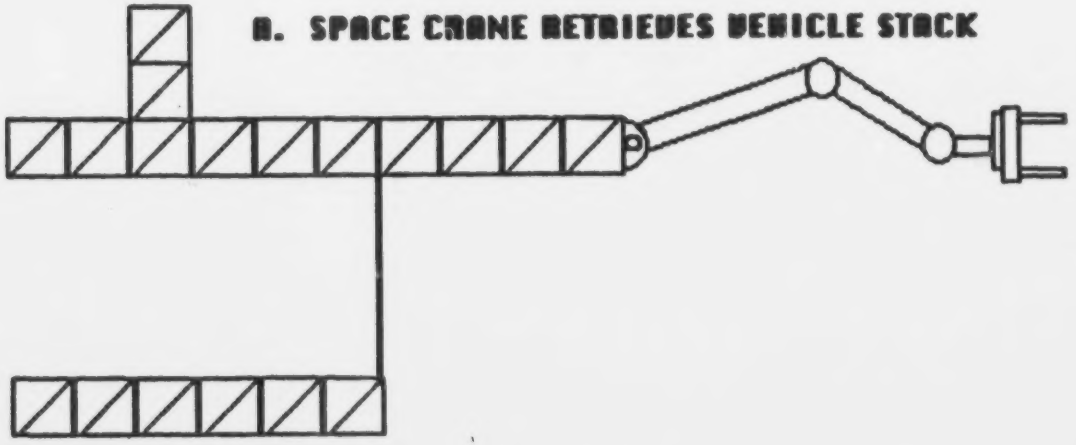

SPACE STATION VELOCITY VECTOR

B. VEHICLE STACK ROTATED FOR INSERTION INTO HANGAR

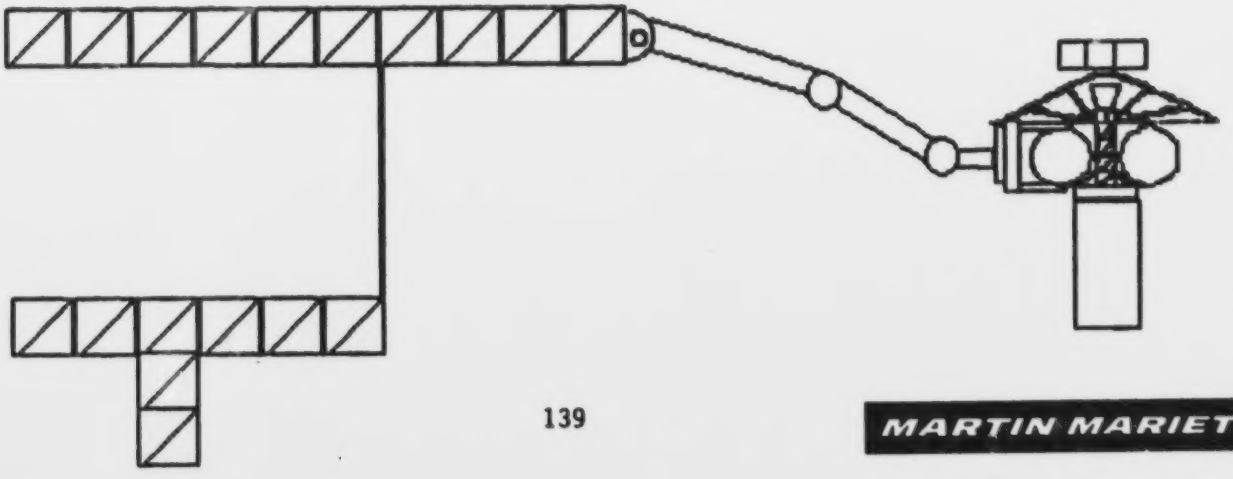

MARTIN MARIETTA

The space crane then moves the vehicle stack inside the hangar, and places the stack in the cradle carriages.

SBOTV RETRIEVAL & BERTHING (CONTINUED)

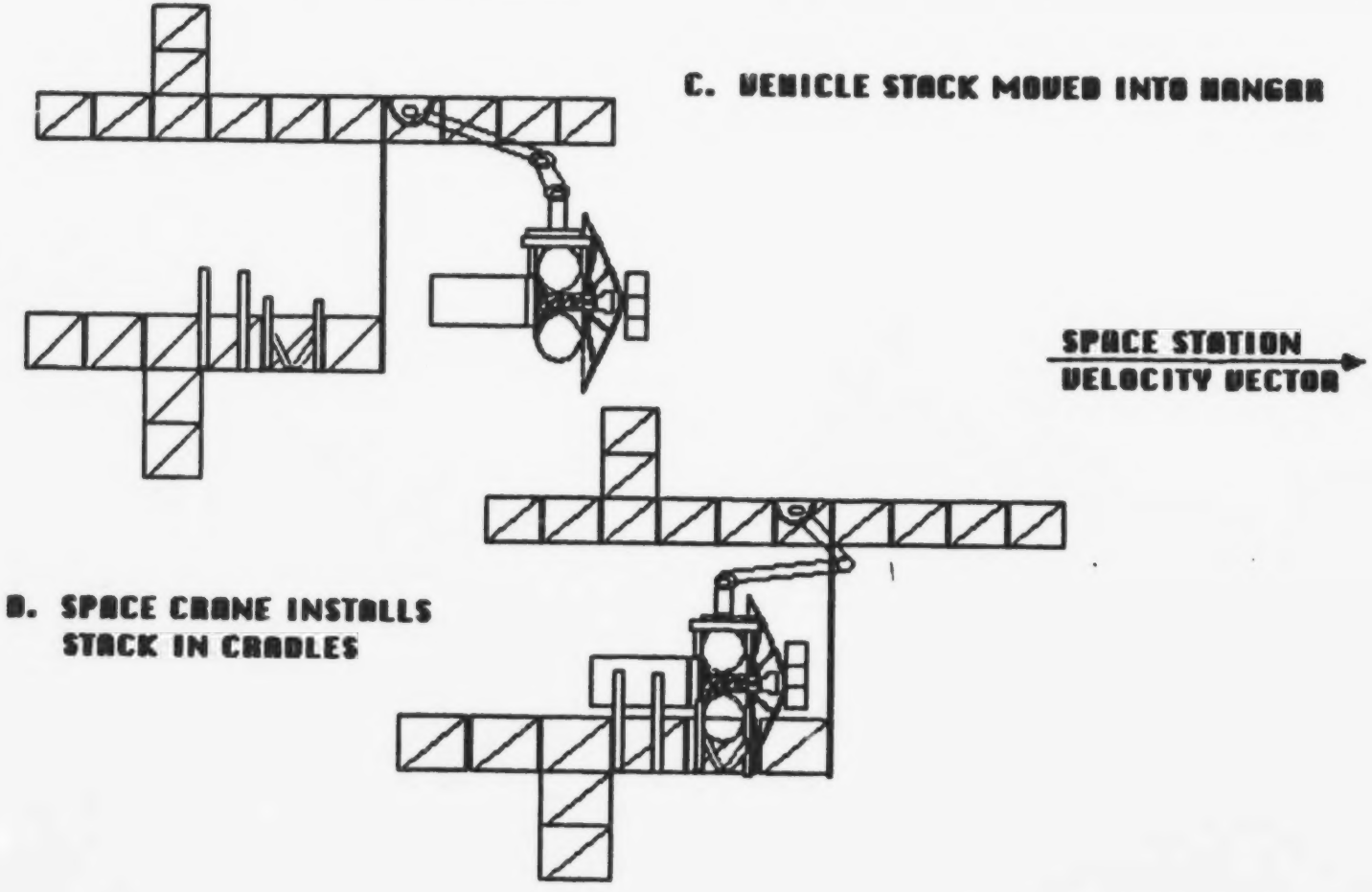

MARTIN MARIETTA

3.2.5 SPACE STATION/SPACE-BASED OTV FUNCTIONAL REQUIREMENTS (CONTINUED)

The functional requirements for the final two operational phases, servicing and maintenance, and logistics support, are shown on the facing page chart. As seen from the servicing and maintenance functional requirements, the concept employed is quite similar to that which one might expect to see at a United Airlines maintenance facility, and relies heavily on nondestructive inspection techniques to verify integrity.

SBOTV/SPACE STATION FUNCTIONAL REQUIREMENTS (CONTINUED)

0 SERVICING & MAINTENANCE

- PROVIDE METEOROID AND THERMAL PROTECTION DURING SERVICING & MAINTENANCE OPERATIONS
- PERFORM STRUCTURES NDI
- PERFORM LEAK TEST NDI
- PERFORM BEARING SURFACE WEAR NDI
- PERFORM AEROBRAKE MATERIAL NDI
- REMOVE AND REPLACE SBOTV ORUs AS REQUIRED
- REFOLD DEGRADED AEROBRAKE AS REQUIRED

0 LOGISTICS SUPPORT

- TRANSLATE SPARE SBOTV ORUs FROM SHUTTLE BAY TO STOWAGE
- TRANSLATE FAILED/DEGRADED SBOTV ORUs FROM STOWAGE TO SHUTTLE BAY
- RESUPPLY PROPELLANT TANK FARM

3.2.5 SPACE STATION/SPACE-BASED OTV FUNCTIONAL REQUIREMENTS - SERVICING & MAINTENANCE

Our SBOTV servicing and maintenance concept includes positive control of the vehicle during all operations and involves automation and robotics for all processing steps. EVA operations are considered strictly as a contingency mode.

SBOTV SERVICING & MAINTENANCE

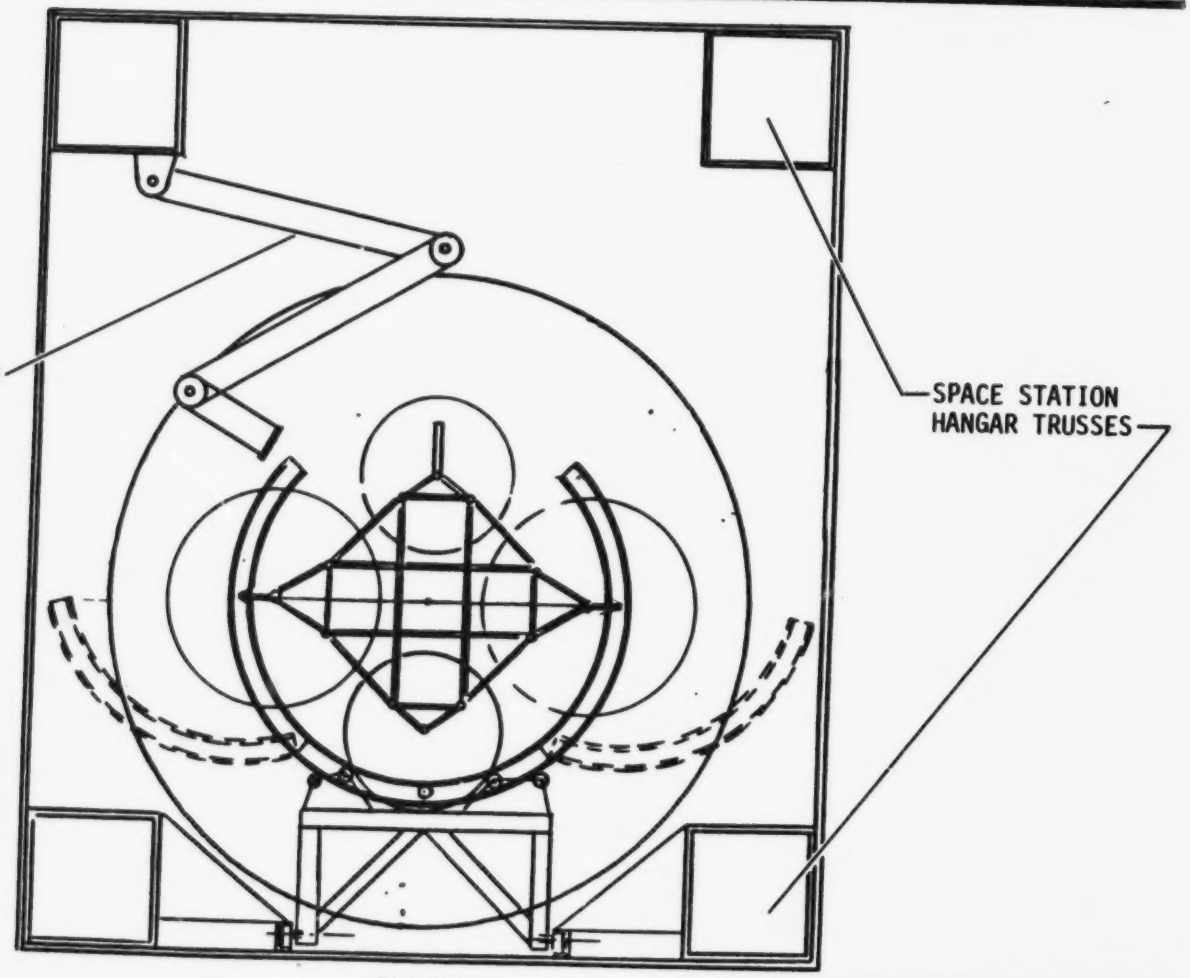

END VIEW

MARTIN MARIETTA

3.2.6 SPACE STATON/SPACE-BASED OTV ACCOMMODATION REQUIREMENTS

From the detailed functional flow and functional requirements analyses performed, a corresponding set of accommodation requirements was generated. Each accommodation element was then correlated with the operational phase in which it was required to be used. The following two charts are a compilation of operational phases (left column) with accommodation elements (top of chart).

A subsequent chart in this volume provides a similar listing of accommodations necessary to support Ground-Based OTV operations. Whenever possible, the same terminology was employed so that GBOTV accommodations capable of supporting the transition from a ground-based to a space-based system could be readily identified.

SBOTV/SS ACCOMMODATION REQUIREMENTS

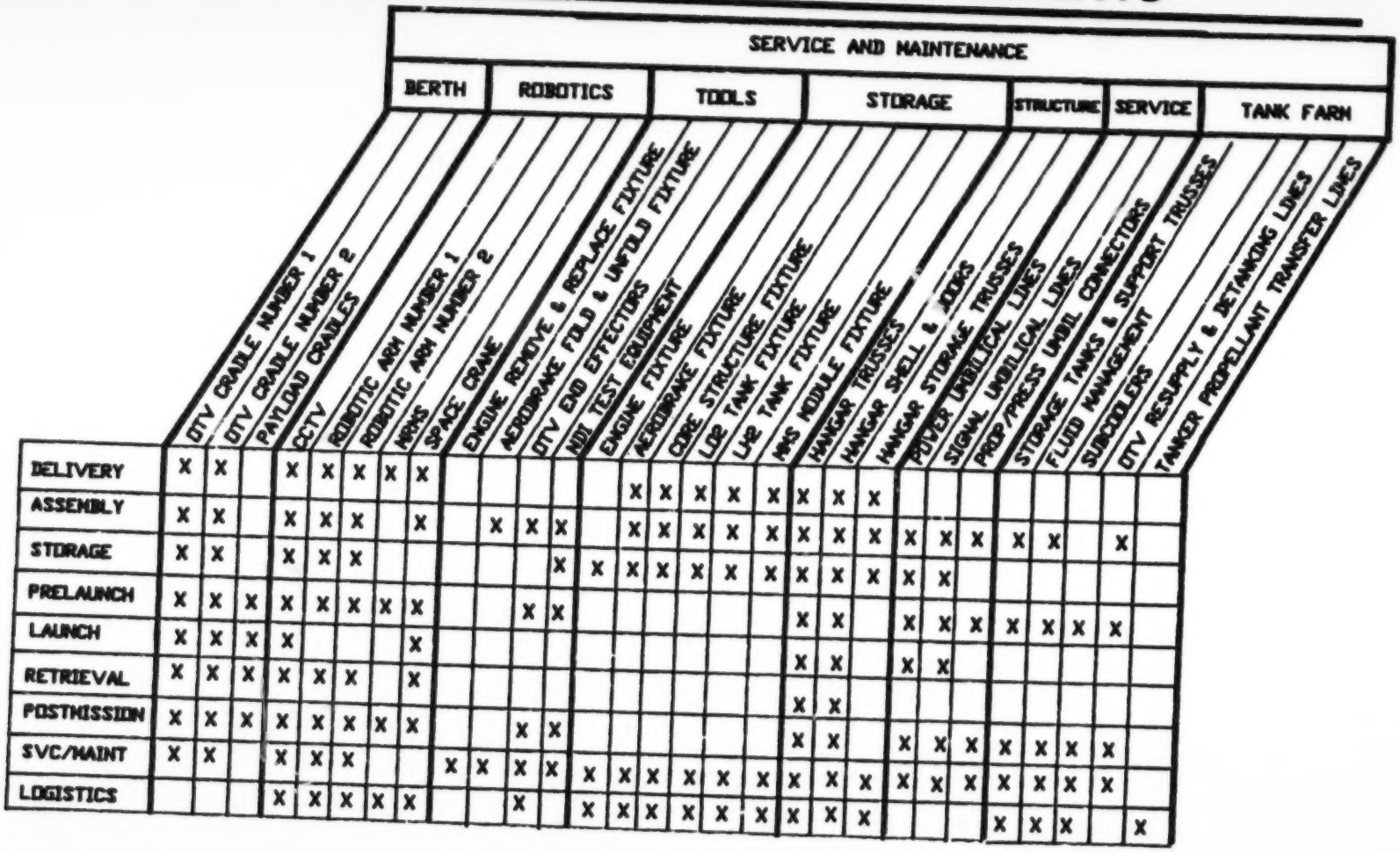

MARTIN MARIETTA

SBOTV/SS ACCOMMODATION REQMTS (CONT.)

	SERVICE AND MAINTENANCE																	GROUND SUPPORT									OPTIONAL STORAGE			
	SS MANNED MODULE																	DATA BASES									STORAGE HANGAR			
	GROUND SUPPORT COMMUNICATIONS	CONTROL CONSOLE	OTV CHECKOUT SOFTWARE	PAYLOAD CHECKOUT SOFTWARE	OMV CHECKOUT SOFTWARE	NDI SOFTWARE	ROBOTIC SOFTWARE	OTV SUM SOFTWARE	TANK FARM SOFTWARE	COMMUNICATIONS	PROPELLANT FARM	ROBOTIC ARM	LOGISTICS-REFURBISHMENT/SUPPLY	OTV FUNCTIONAL TEST/CHECKOUT	NONDESTRUCTIVE INSPECTION	CONFIGURATION SERVICING & MAINT	MISSION PLANNING	OTV CRADLE NUMBER 3	OTV CRADLE NUMBER 4	SIGNAL UMBILICAL	POWER UMBILICAL	HANGAR TRUSSES	HANGAR SHELL & DOORS	HANGAR STORAGE TRUSSES	ROBOTIC ARM	CCTV
DELIVERY	X	X					X			X		X																		
ASSEMBLY	X	X	X			X	X	X	X	X	X	X	X	X	X	X														
STORAGE	X	X	X				X			X		X	X	X		X		X	X	X	X	X	X	X	X	X	X	X	X	X
PRELAUNCH	X	X	X	X	X	X	X	X	X	X	X	X		X	X	X	X													
LAUNCH	X	X	X	X	X					X				X			X													
RETRIEVAL	X	X					X			X		X																		
POSTMISSION	X	X					X		X	X	X	X			X															
SVC/MAINT	X	X	X			X	X	X	X	X	X	X	X	X	X	X														
LOGISTICS	X	X					X		X	X	X	X	X			X				X	X	X	X	X	X	X	X	X	X	X

MARTIN MARIETTA

3.2.7 SPACE-BASED OTV COMPOSITE TIMELINES - NOMINAL MISSION MODEL REV. 8

The following graph depicts the total elapsed time required to perform all scheduled service and maintenance (S&M) activities and the cumulative storage time for the OTV for each year of the nominal mission model. The graph incorporates the estimated time to construct the propellant tank farm (PTF) and OTV hangar facilities. These activities were arbitrarily scheduled for accomplishment during the 2 years preceding scheduled OTV IOC.

The S&M times include all pre and postmission processing activities for each 55K and 81K stage, and is computed serially since only one stage will be undergoing S&M activities at any given time. The principle rationale for this constraint was based upon the robotic arms and computer resources available to support these tasks and our concern to limit the overall OTV processing impact upon Space Station. Our analysis and this chart confirms that even with this self-imposed constraint, OTV processing would not be adversely effected even if the S&M times were increased by a factor of three.

OTV storage time was derived by subtracting the total mission operations time and S&M time for each stage from the annually available hours (8,760). The pronounced reduction of storage time during the mature years of the program (2006-2010), is caused by the longer mission operations time associated with the 80K Lunar Delivery Missions.

SBOTV COMPOSITE TIMELINES

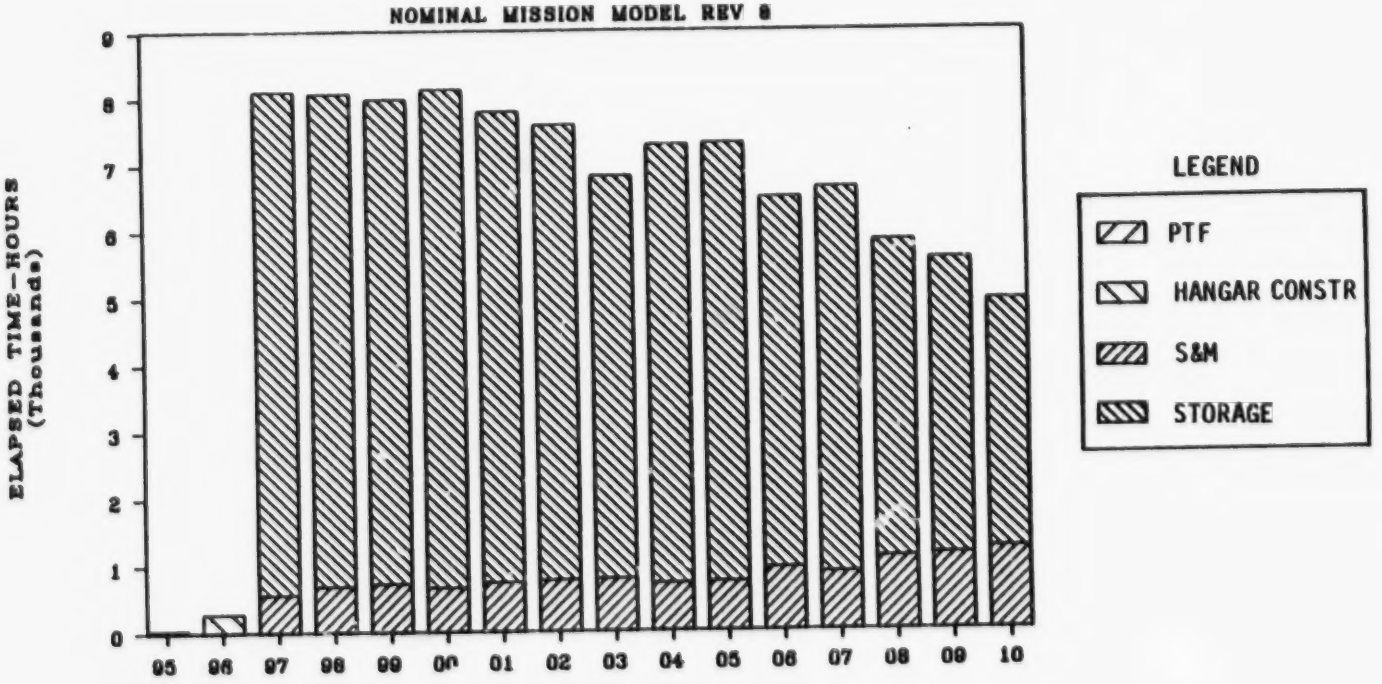

PTF - PROPELLANT TANK FARM S&M - SERVICE & MAINTENANCE

MARTIN MARIETTA

3.2.7 SPACE-BASED OTV COMPOSITE TIMELINES - LOW MISSION MODEL REV. 8

The primary difference between this graph and the nominal mission model is the deletion of the 80K Lunar Delivery Missions and the associated 81K 1st and 2nd stages.

Adoption of this model will reduce overall mission operation and S&M processing requirements; however, OTV storage times will experience a commensurate increase for each year of the model. Although this approach will effectively reduce overall program costs, the same basic Space Station accommodations would be needed to support the smaller OTV fleet required by this model.

SBOTV COMPOSITE TIMELINES

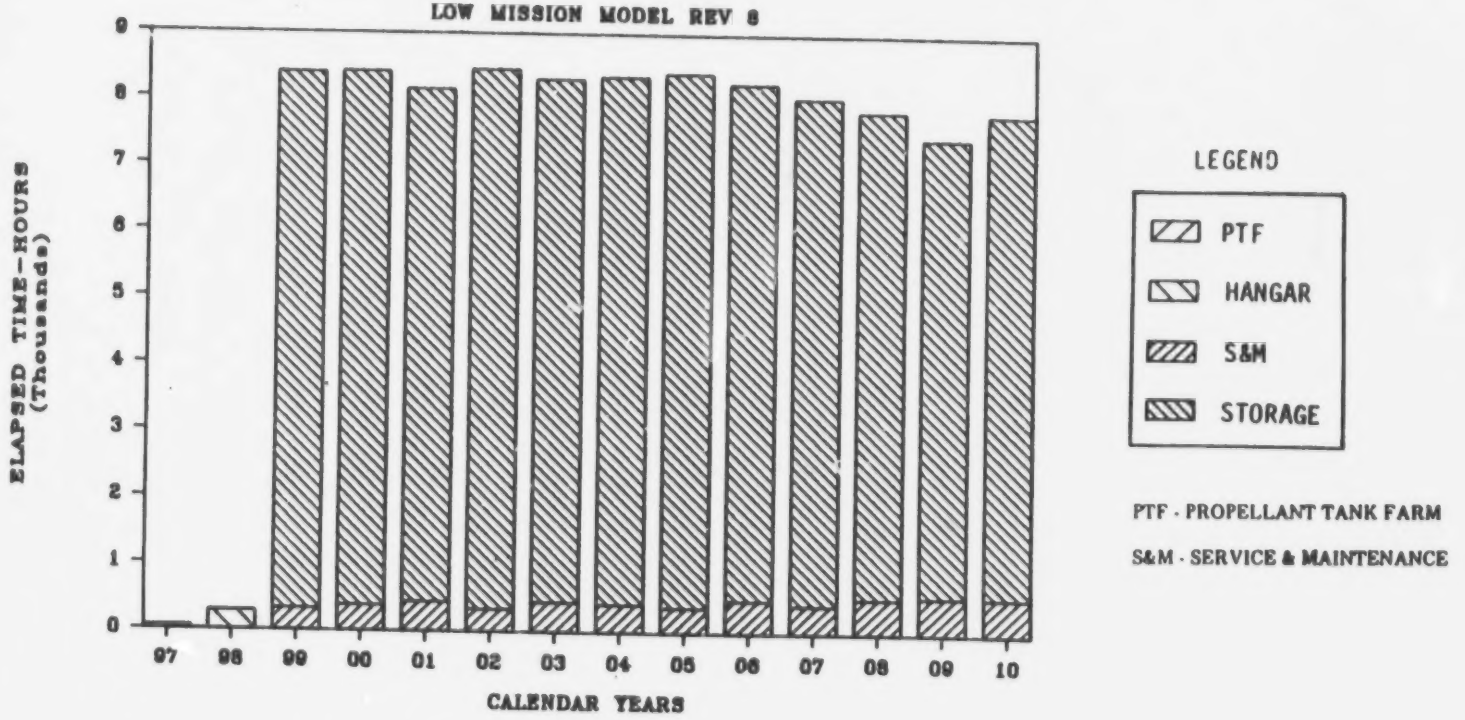

PTF - PROPELLANT TANK FARM

S&M - SERVICE & MAINTENANCE

MARTIN MARIETTA

3.2.8 SPACE-BASED OTV SERVICE AND MAINTENANCE TIMELINE - NOMINAL MISSION MODEL REV. 8

The facing page chart shows an enlargement of the service and maintenance times shown on the previous nominal mission model composite chart. The elapsed time, depicted for each of the model years, incorporates the derived pre and postmission processing requirements for each SBOTV stage. In addition, any maintenance activity routinely scheduled, i.e., main engine replacement, ring laser gyro calibration, aerobrake replacement, and diagnostic testing was also included.

Our analysis has shown that an average processing time of approximately 46 hours can be realized over the life of the program. However, projected processing timelines following any specific mission may vary from a low of 45 hours to a high of 98 hours based upon the specific maintenance tasks scheduled to be accomplished.

SBOTV SERVICE AND MAINTENANCE TIMELINE

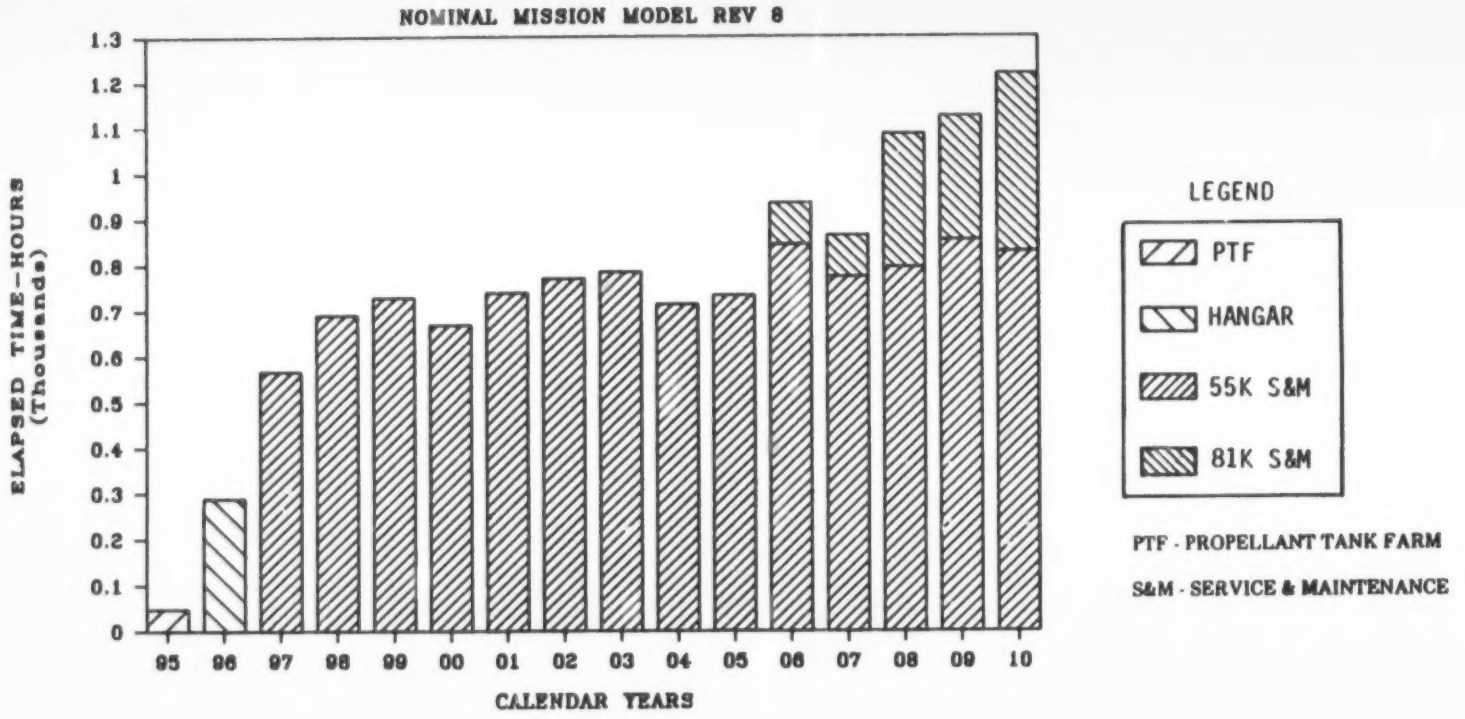

MARTIN MARIETTA

3.2.8 SPACE-BASED OTV SERVICE AND MAINTENANCE TIMELINE - LOW MISSION MODEL REV. 8

The same rationale, as previously stated for the nominal mission model, was used to develop the service and maintenance timeline for the low mission model. Since the low mission model calls for slightly less than half of the nominal mission model flights and slips the 80K Lunar Delivery Missions beyond 2010, the servicing and maintenance elapsed times are correspondingly reduced.

SBOTV SERVICE AND MAINTENANCE TIMELINE

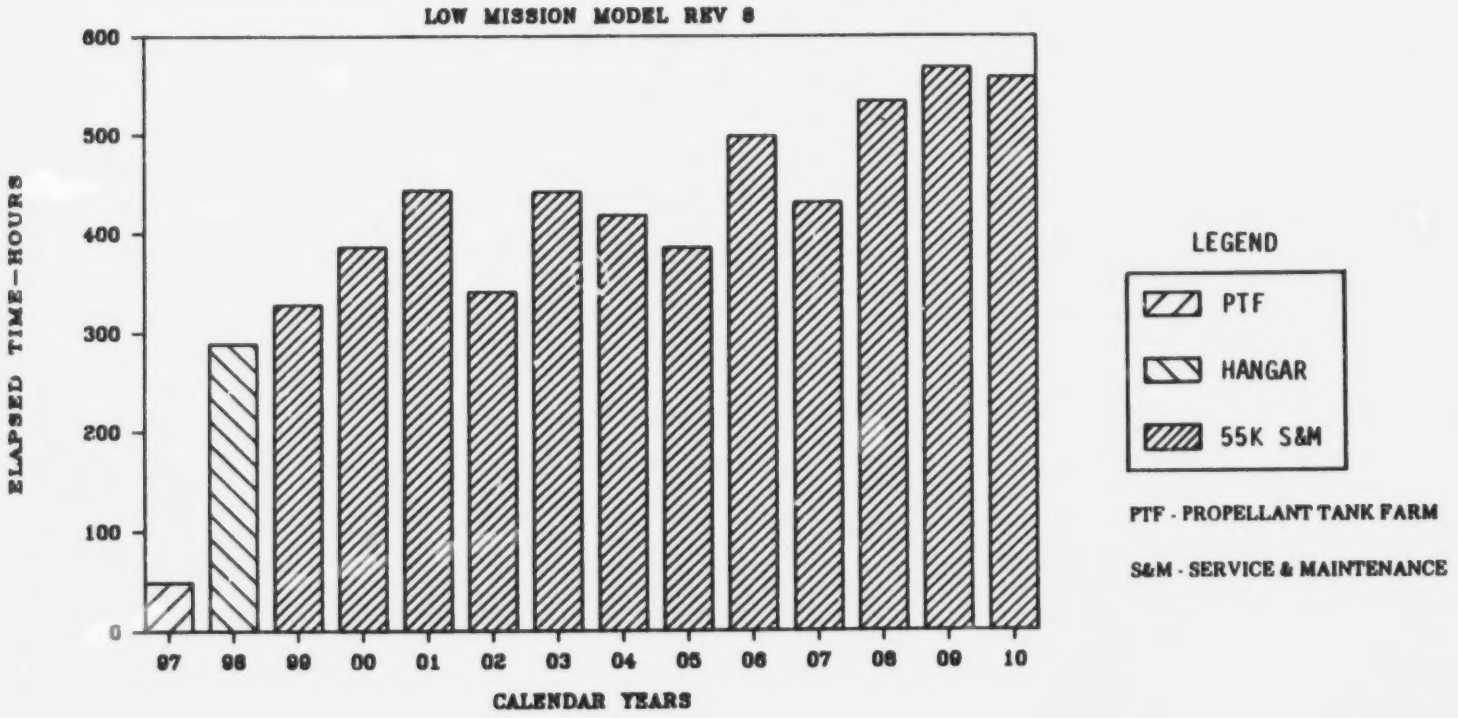

MARTIN MARIETTA

PRECEDING PAGE BLANK NOT FILMED

3.3 SPACE-BASED OTV ACCOMMODATIONS DESIGN AND OPTIMIZATION

3.3.1 SPACE-BASED OTV ACCOMMODATIONS DESIGN AND OPTIMIZATION OVERVIEW

Under Study Methodology, Paragraph 1.3, this effort was defined as Task 5.2.2. Using the requirements definition statement provided by Task 5.2.1 (Paragraph 3.2), together with OTV concept updates from Tasks 2 and 3, accommodations were defined and conceptual designs prepared and optimized. For purposes of display, these are shown as six key areas on the chart. In actuality, the number of groupings was reduced to five since the requirement for a pressurized maintenance area was eliminated. Once the conceptual design and optimization process was completed, additions and/or modifications were made to accommodate an OTV fleet.

At the Midterm Review, in early March 1985, a preliminary accommodations definition statement, identifying all such requirements encountered to that date, was provided to NASA/MSFC.

Outputs of this task were provided to Task 7, for incorporation of technology development requirements into the Technology Development Plan, to Tasks 2 and 3, for optimization of design, to Task 6, for option assessment, and to Task 5.2.3, for accommodations assessment. The remaining set of charts under Paragraph 3.3 identify the configurations and concepts selected, and the outputs provided to the other tasks.

TASK 5.2.2 SBOTV ACCOMMODATIONS DESIGN AND OPTIMIZATION

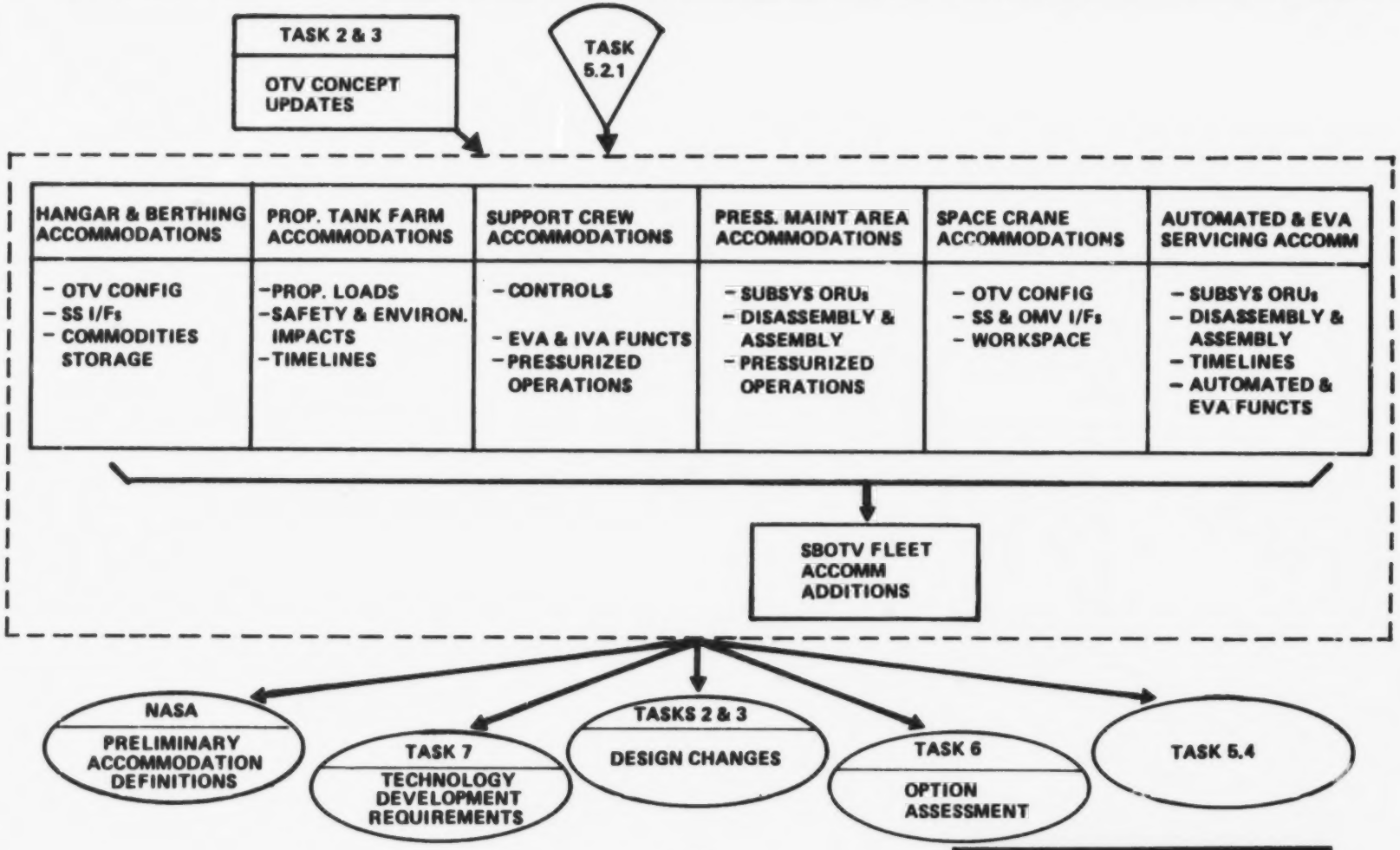

MARTIN MARIETTA

3.3.1 SPACE-BASED OTV ACCOMMODATIONS DESIGN AND OPTIMIZATION-FOC SPACE STATION WITH SBOTV ACCOMMODATIONS

There are really only two prime differences between our current configuration for the FOC Space Station with SBOTV accommodations and the one shown at the midterm review. A retrieval beam has been added to the hangar along the positive velocity vector, and two large propellant tanks, with a total capacity of 200,000 lbs have been added longitudinally and underneath the hangar. Both of these differences will be addressed further in this section.

FOC SPACE STATION WITH SBOTV ACCOMMODATIONS

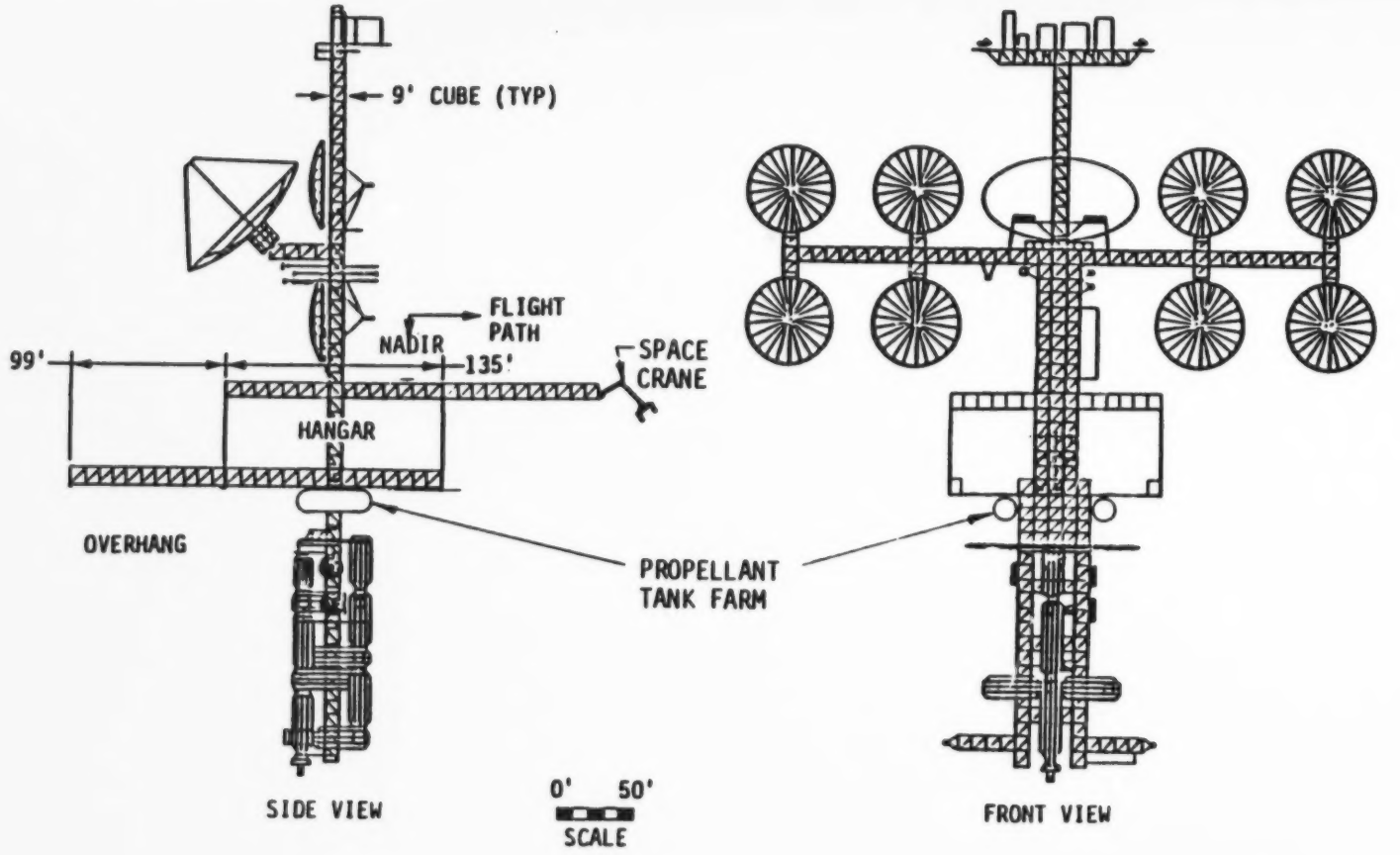

MARTIN MARIETTA

3.3.2 HANGAR CONFIGURATION

A side view of the selected concept 4 hangar is shown, with various storage areas identified, and the longest, largest OMV/OTV/Payload stack (80K Lunar Delivery) placed within. To support this mission, the hangar must evolve to a length of 135 feet. Using Goodyear data on the hangar shell material (described on the next chart), the skin weight for this largest hangar configuration would amount to some 29,500 lbm. The hangar supporting trusses and rails equate to some 11,000 lbm. So the hangar itself, excluding robotic mechanisms, ORU storage fixtures, etc., is on the order of 40,000 lbm, about the same mass as a Space Station Common Module, but with considerably greater volume. For those of you still considering a pressurized maintenance area, this hangar would require approximately 460,000 cubic feet of air to fill it.

The relative size of the hangar is of concern to some as they relate size to cost. Actually, this hangar is one of the least expensive items among the SBOTV accommodations complement. The trusses used are the same as those for Space Station, and the inflatable hangar shell appears to be more cost effective than many other candidate materials.

As previously noted, the hangar length shown is for the largest OMV/OTV/Payload stack, and is not required at Space Station FOC. The time-phased requirements for hangar length are shown in the Potential Space Station Evolutionary Implementation Plan, Paragraph 5.3.1.2.

SBOTV HANGAR CONFIGURATION

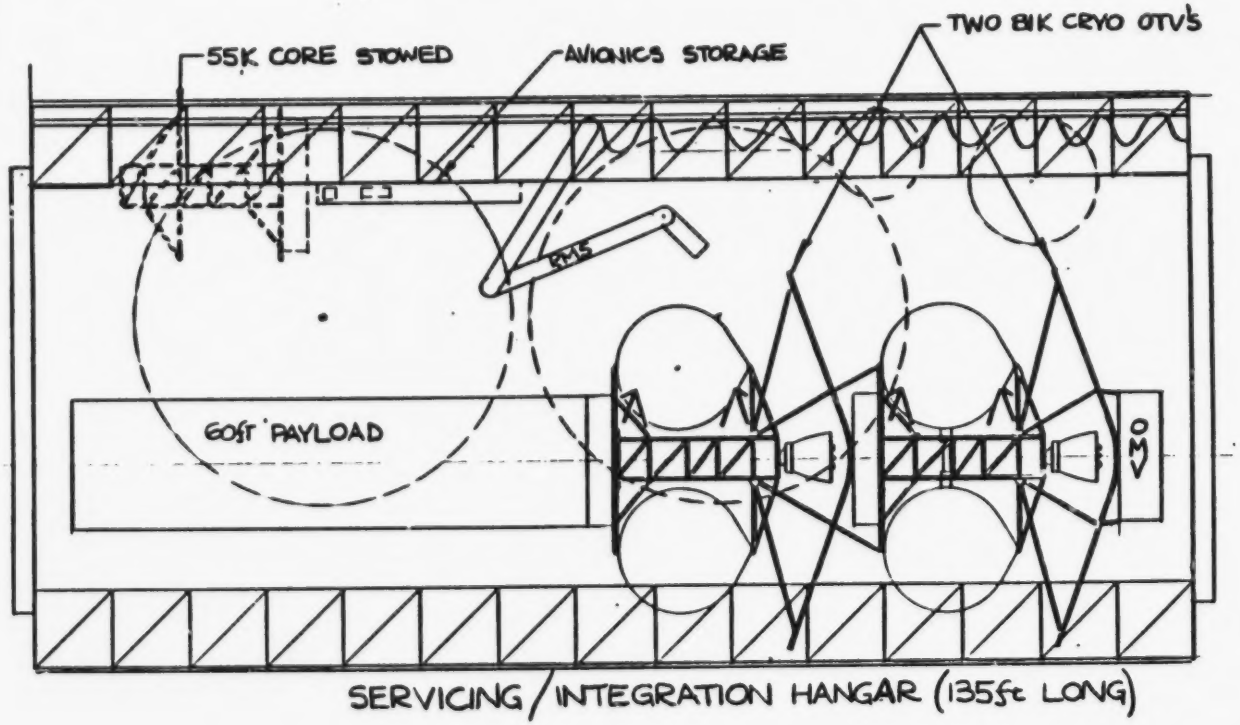

MARTIN MARIETTA

3.3.2 HANGAR CONFIGURATION - SBOTV HANGAR CROSS SECTION

The cross section of the selected concept 4 hangar is depicted on the facing page chart. This totally rectangular hangar provides a large amount of internal storage space. The Space Sation nine foot truss centers drive us to a hangar 63 feet high by 54 feet wide. We advocate use of Goodyear inflatable hangar material (NASA/LANGLEY Contract NAS1-9112) as the hangar skin. This skin is 2 inches thick, adding an additional four inches to the hangar dimension. We are not advocating the use of an EVA astronaut for opertions, except in contingency situations, but have shown an EMU suited, MMU-equipped astronaut in the right-center portion of the hangar to provide a perspective of the relative size.

In this concept, the manipulator arms are held to negative and positive x translation, and the OTV stage is rotated 90° in the cradle to provide servicing accessibility.

SBOTV HANGAR CROSS SECTION

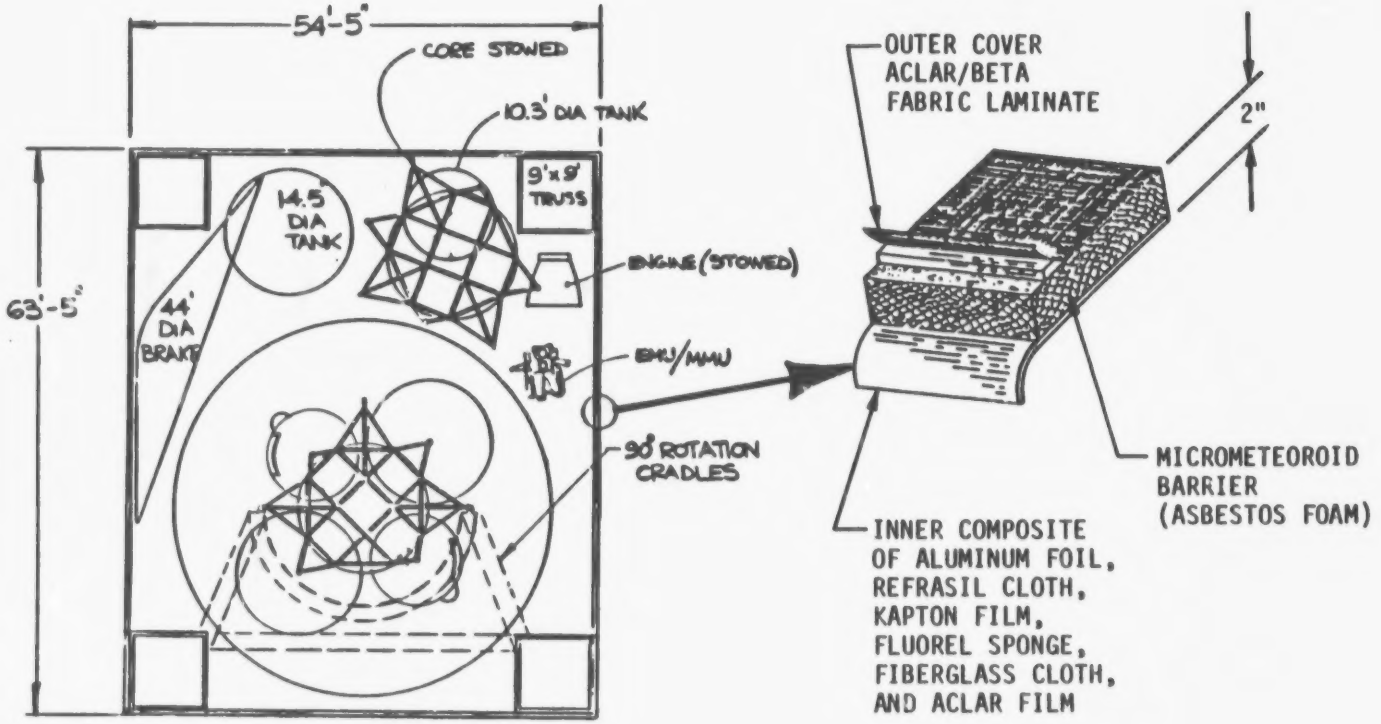

CROSSECTION (44' DIA BRAKE) OF HANGAR

3.3.3 BERTHING CONFIGURATION

The selected berthing configuration utilizes cradle carriages to support both the SBOTV and the payload. This allows positive control of the vehicles regardless of other simultaneous activities occurring at Space Station.

SBOTV BERTHING CONFIGURATION

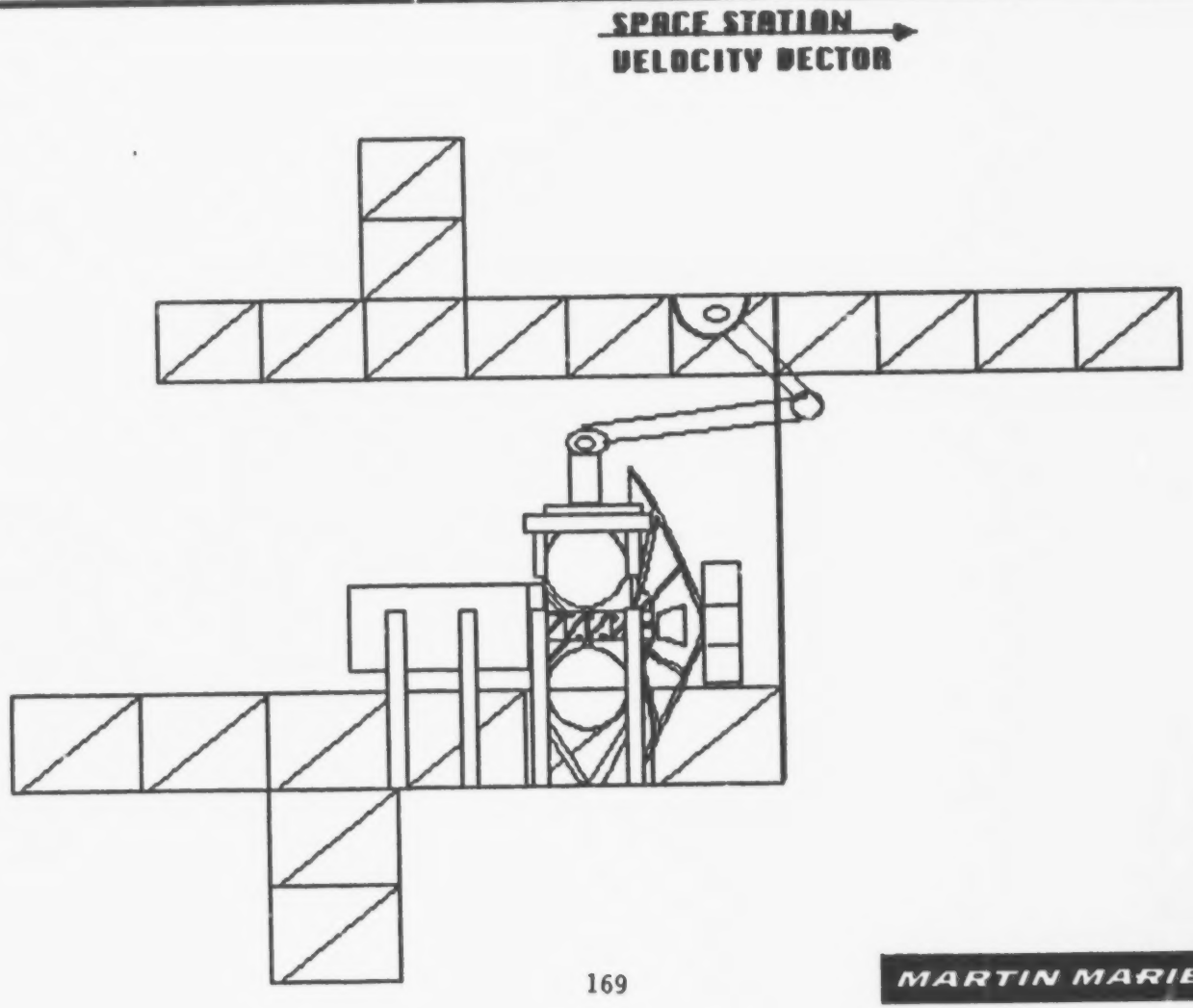

MARTIN MARIETTA

3.3.3 BERTHING CONFIGURATION - SPACE-BASED OTV CRADLE & CRANE INTERFACE DIMENSIONS

The resultant Space-Based OTV cradle and crane interface dimensions are shown on the facing page chart.

SBOTV CRADLE INTERFACE DIMENSIONS

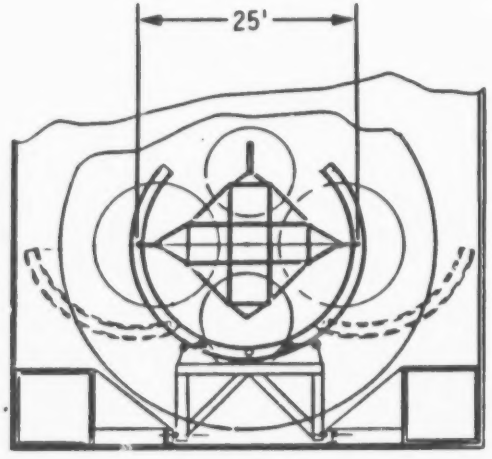

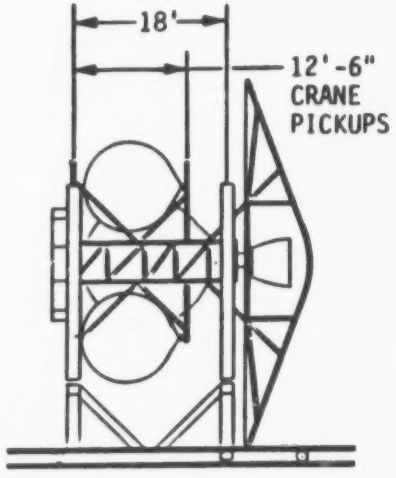

MARTIN MARIETTA

3.3.4 PROPELLANT TANK FARM CONFIGURATION

The selected propellant tank farm configuration is shown on the facing page chart. The tank farm is located along side and underneath the hangar to minimize the propellant transfer line lengths. The propellant umbilicals are located in a specific section of the hangar, requiring that the SBOTV be precisely located during resupply and detanking operations. Control of these operations is effected through the OTV control console located within one of the Space Station modules.

SBOTV PROPELLANT TANK FARM CONFIGURATION

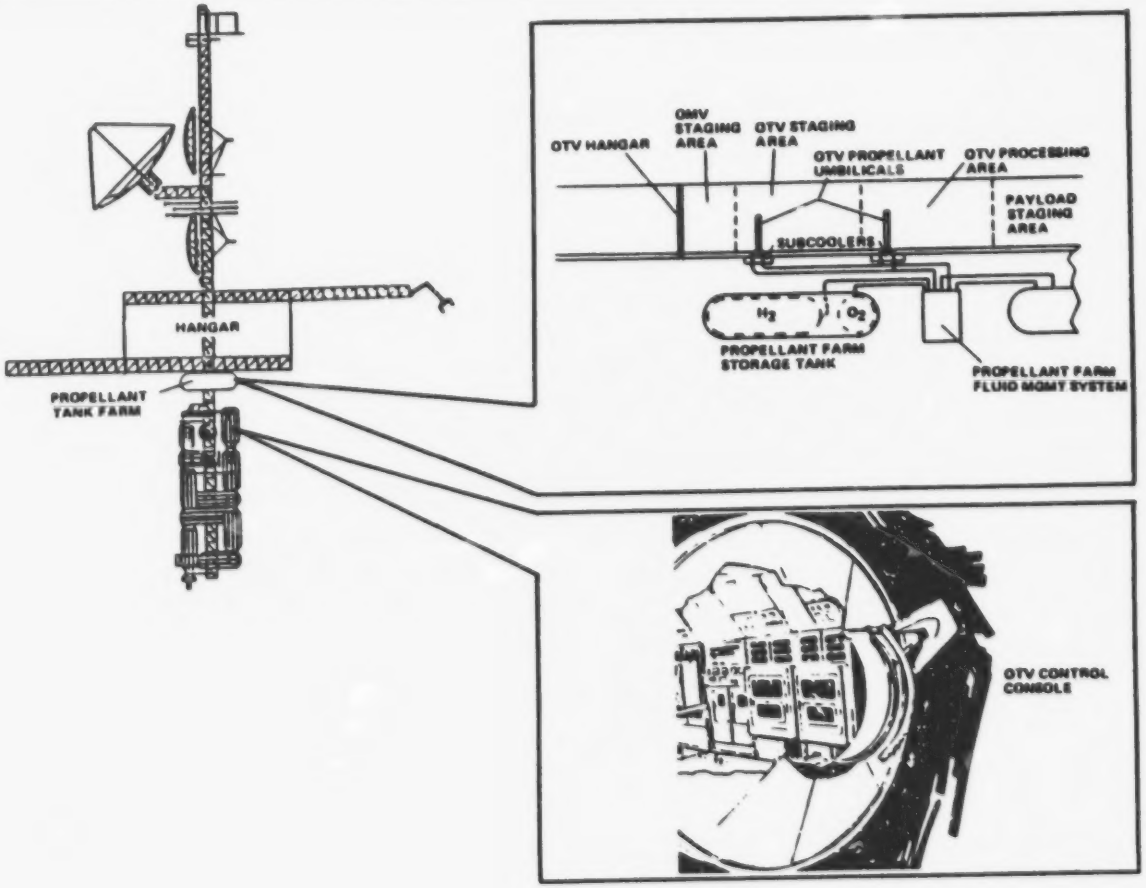

ORIGINAL PAGE IS
OF POOR QUALITY

3.3.5 LAUNCH CONFIGURATION

The selected SBOTV launch configuration is as shown. Deployment latches on the cradle carriage engage with pins on the OMV, and the carriage translates the vehicle stack toward the end of the deployment porch, imparting 1 to 2 fps of momentum. As the stack nears the end of the porch, the latches are released and deployment is achieved.

SBOTV LAUNCH CONFIGURATION

SPACE STATION
VELOCITY VECTOR

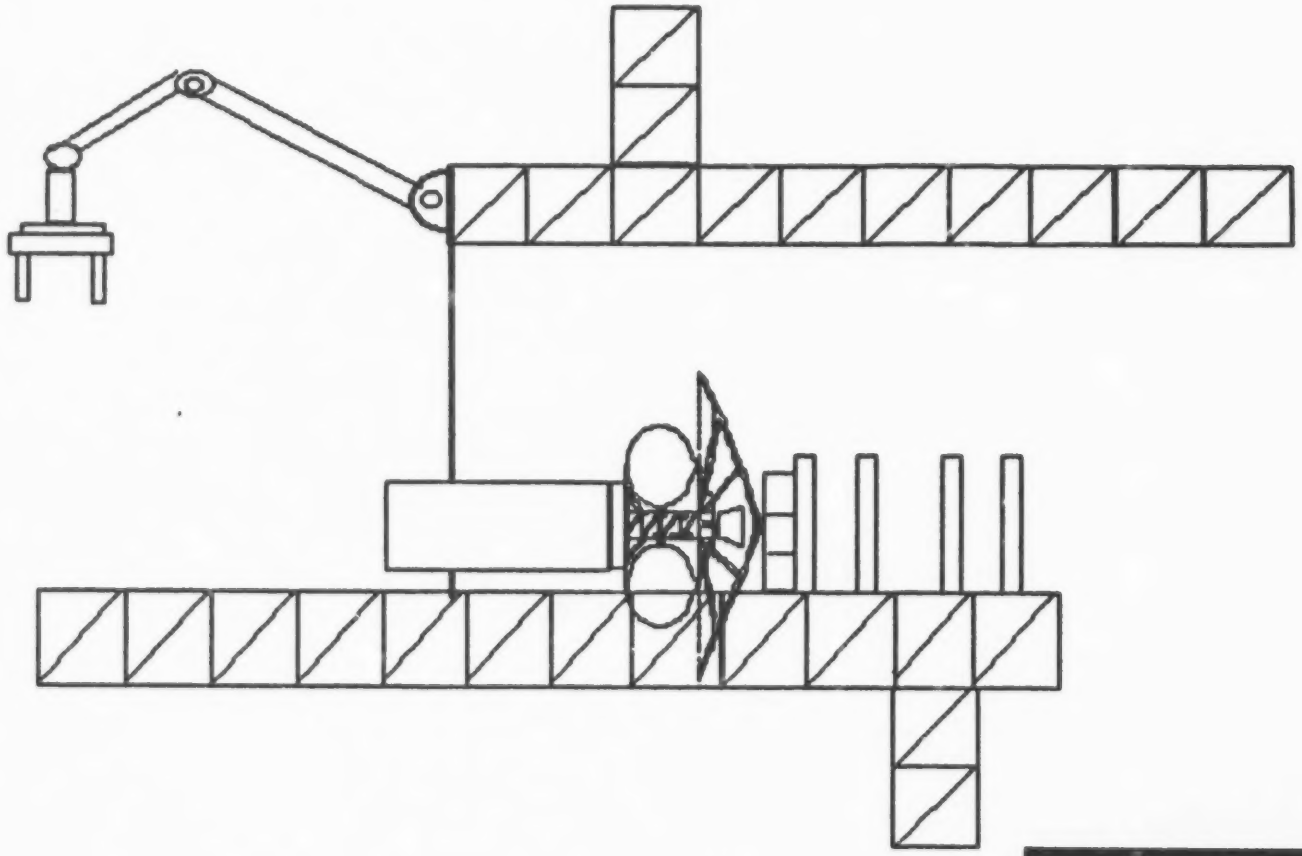

MARTIN MARIETTA

3.3.6 RETRIEVAL CONFIGURATION

The selected SBOTV retrieval configuration is as shown. Retrieval is accomplished along the Space Station positive velocity vector using the space crane equipped with a special end effector system. Retrieval operations are performed at the end of a retrieval beam of sufficient length that, should the vehicle stack start to rotate, no impact with Space Station would occur.

SBOTV RETRIEVAL CONFIGURATION

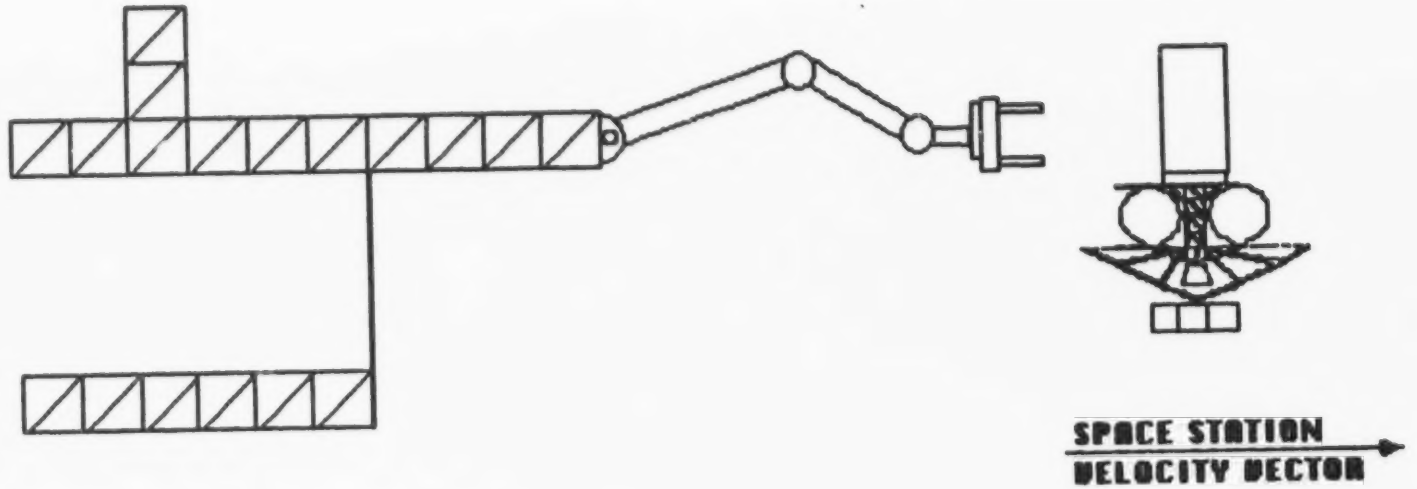

3.3.7 SPACE CRANE END EFFECTOR

We conceptually designed the end effector system needed for the space crane to retrieve the SBOTV as shown on the facing page chart. The distance between the two RMS type effectors is approximately 12 1/2 feet. Two CCTV cameras are required for alignment of the end effector with the SBOTV crane interfaces. The wrist and rotator joints provide for this retrieval alignment, and for rotation and insertion of the vehicle stack into the hangar.

SBOTV SPACE CRANE END EFFECTOR

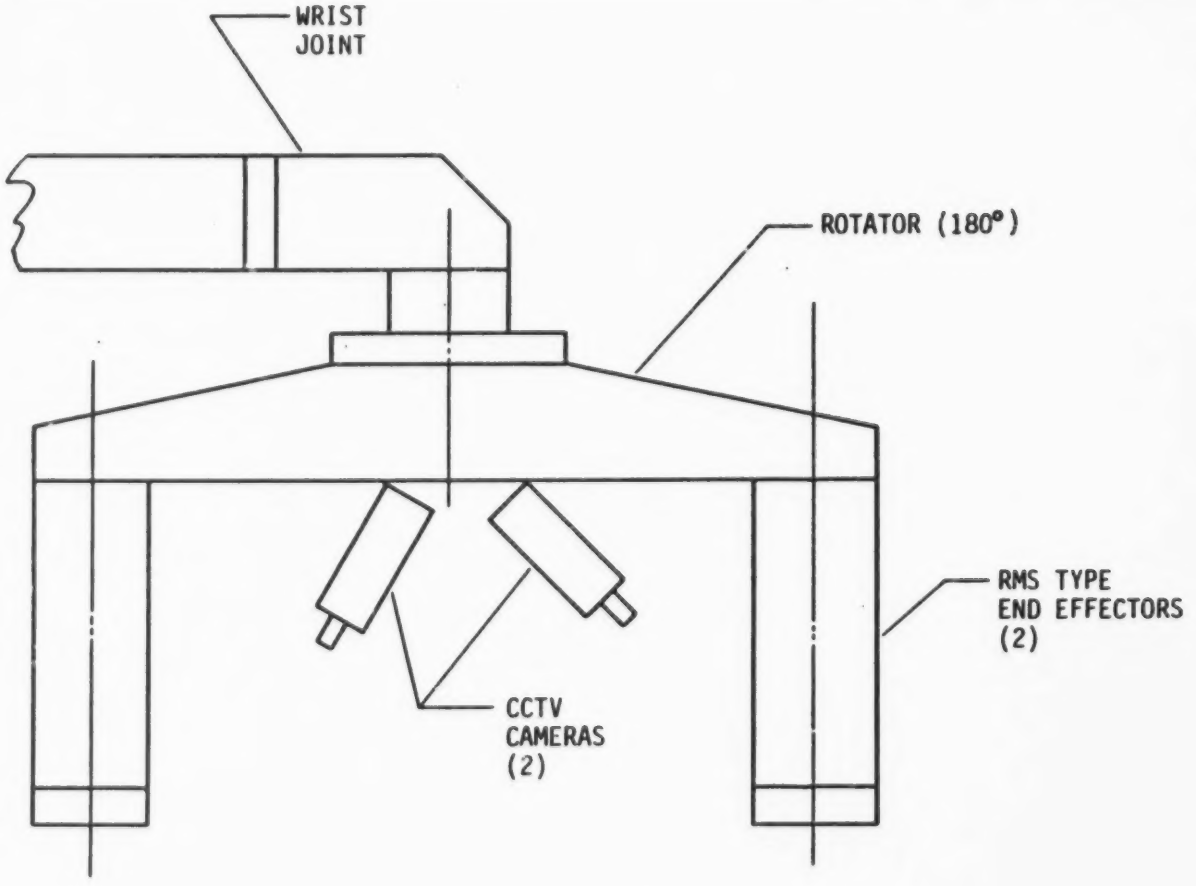

MARTIN MARIETTA

3.3.8 SERVICING CONFIGURATION - SINGLE ROBOTIC ARM

Our servicing concept relies heavily on the use of automation and robotics, and we have performed several robotic simulations to evaluate these techniques. In this frame from a robotic simulation sequence for a single RMS arm, the OTV's LH_2 tank has been detached and is moving away from the vehicle. An overall view of the scenario is provided in the extreme lower left-hand corner of the chart. The tank supports are seen on the right; the RMS arm's base, on the left, is fixed to the hangar main structure. Timelines, joint torques, angles, and other data developed during this simulation were reveiwed in printout form during postsimulation design reviews.

SINGLE ROBOTIC ARM

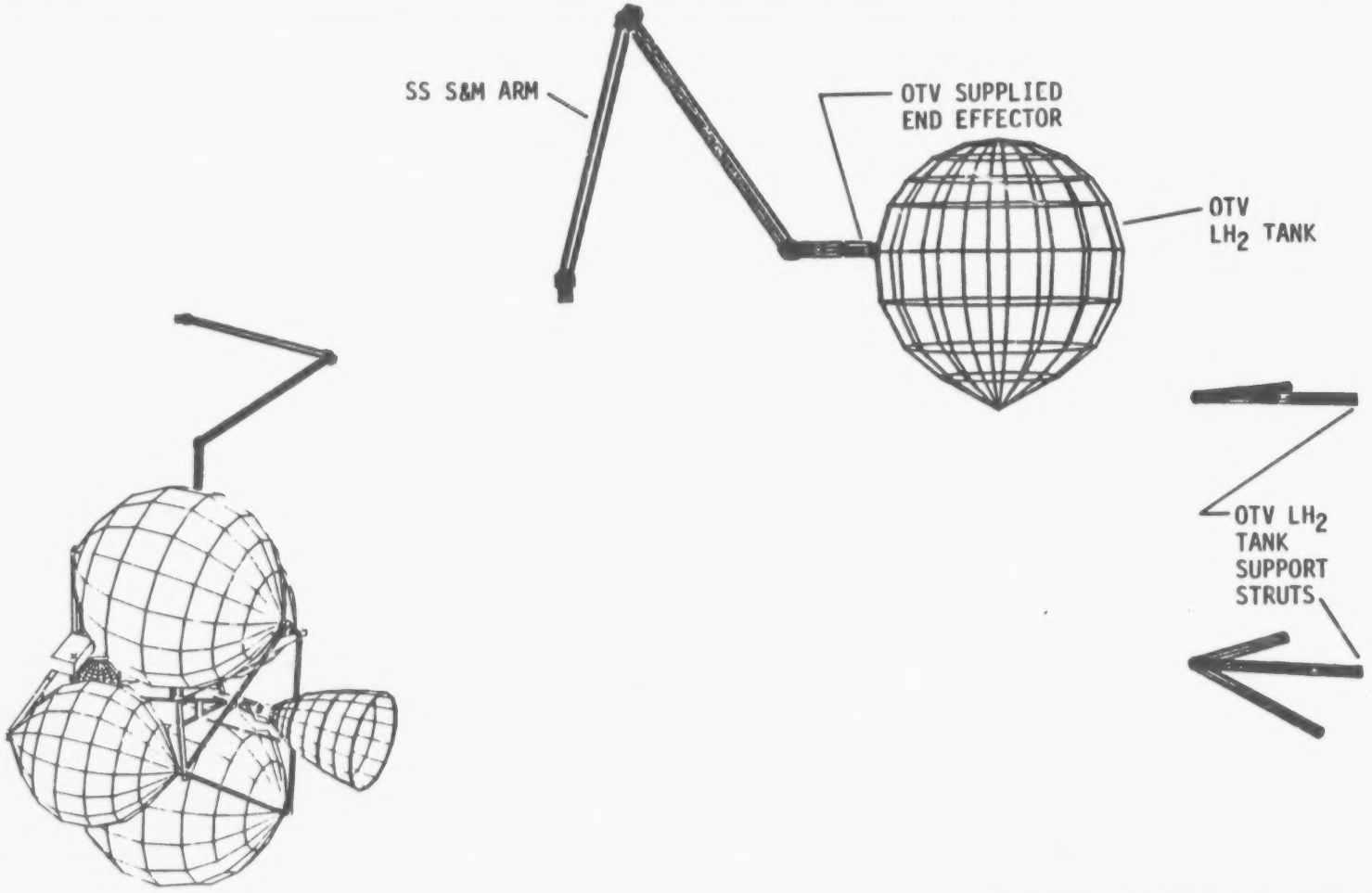

MARTIN MARIETTA

3.3.8 SERVICING CONFIGURATION - DUAL ROBOTIC ARMS

The need for conjointly operating dual robotic arms should be further evaluated in a future study. A frame of the dual-arm simulation is illustrated here. The topmost arm is in motion toward the OTV's LH_2 tank grapple. The lower arm is nearly fully extended at this point in preparation for attachment to the tank's upper truss support point. The dual-arm approach is contrasted with the single arm method by having less time required per tank removal/replace operation.

DUAL ROBOTIC ARMS

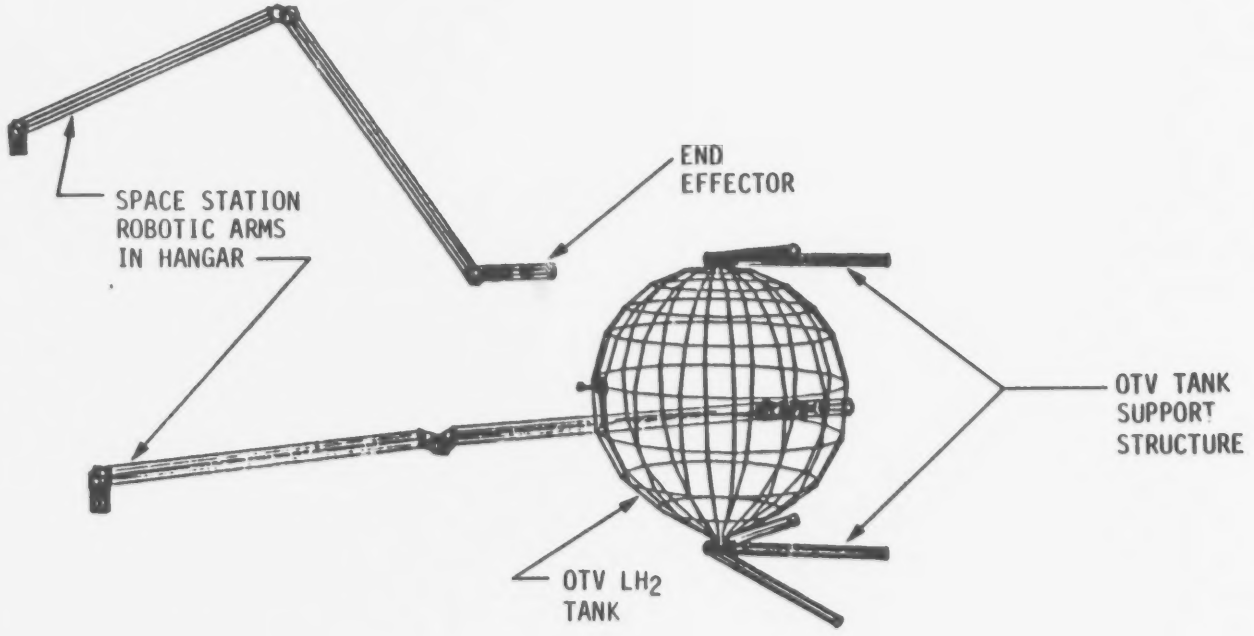

MARTIN MARIETTA

3.3.8 SERVICING CONFIGURATION - ROBOTIC ARM SIMULATION

Martin Marietta developed the ROBSIM (Robotic Simulation) Program under contract from NASA/LaRC. The ROBSIM software system, running on a VAX 11/750 minicomputer and an Evens & Southerland Graphics workstation, is used to develop engineering data on robotic arm design as well as logistics timelines and operational procedures using actual OTV hardware descriptions. The generalized control and processing flow of ROBSIM is illustrated here. Simulation of a tactile end-effector, for example, is a standard working tool within the ROBSIM system. Of particular interest is the reduction of accurate engineering data such as drive torques and joint angles/positions while manipulating portions of vehicle structures. Very realistic kinematics are available to the engineer/designer.

ROBOTIC ARM SIMULATION

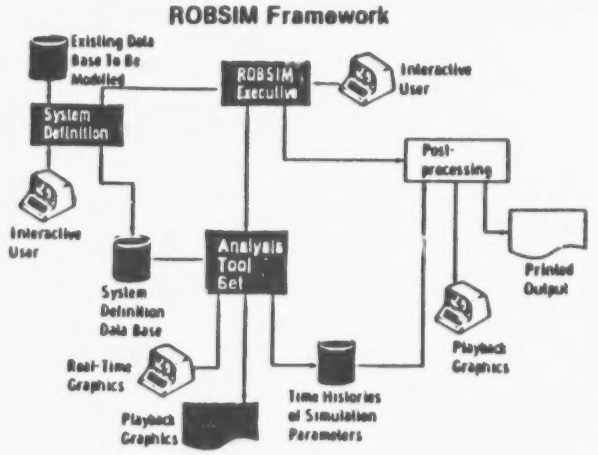

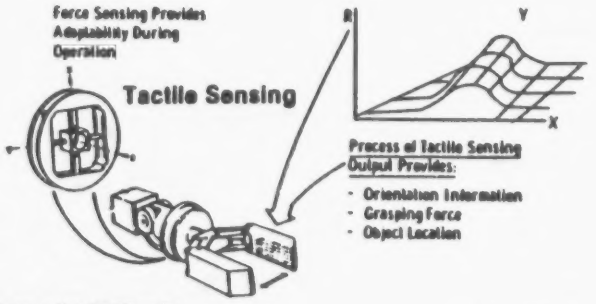

Process of Tactile Sensing Output Provides:

- Orientation Information
- Grasping Force
- Object Location

Types of Tactile Sensors Considered

- Piezoelectric
- P-N Junction
- Foil Method
- Conductive Crystal

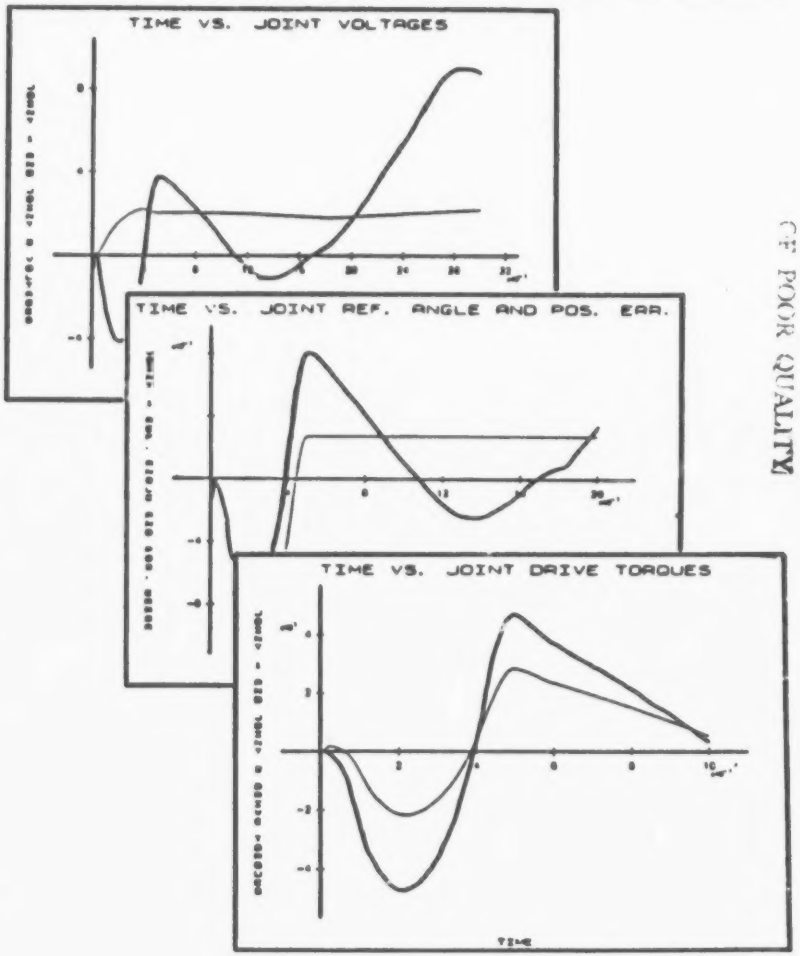

ORIGINAL PAGE IS
OF POOR QUALITY

MARTIN MARIETTA

3.3.8 SERVICING CONFIGURATION - MAIN ENGINE CHANGEOUT

Using a single robotic arm equipped with an engine handling fixturing, and an engine assembly equipped with a pneumatically actuated release plate, removal and replacement of an SBOTV main engine becomes a relatively normal maintenance task.

SBOTV MAIN ENGINE CHANGEOUT

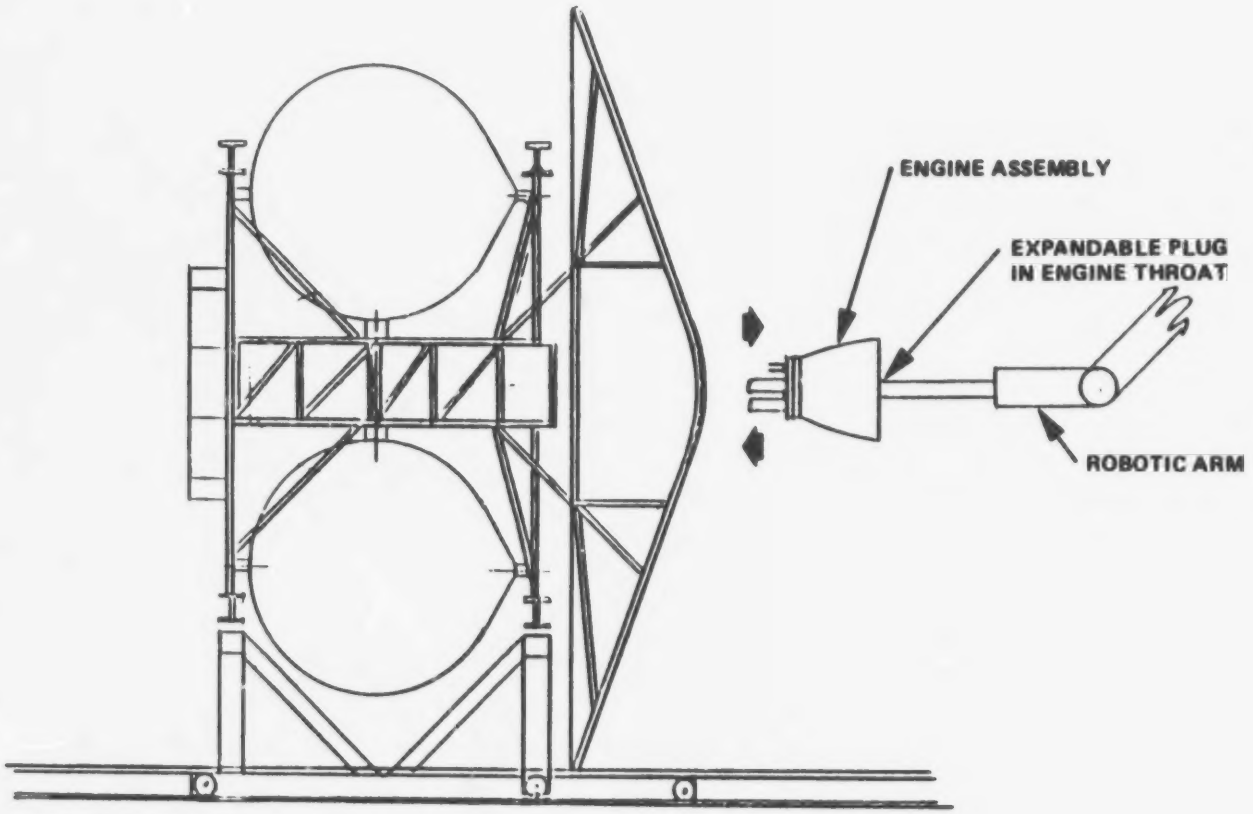

MARTIN MARIETTA

3.3.8 SERVICING CONFIGURATION - MAIN ENGINE REMOVE/REPLACE TIMELINE

Onorbit removal and replacement of the OTV main engines can be accomplished through the use of automated systems if the SBOTV and main engines are initially designed to accommodate these activities. A special tool will be required to release and support the main engine during removal and installation activities. This tool should be adaptable for either robotic or EVA operation.

Main engine replacement can be accomplished in approximately 5.5 man-hours through the use of robotics. This projected time is supported by data received from Rocketdyne and Pratt and Whitney regarding the anticipated removal and replacement of their engines onorbit. In comparison, EVA operations to perform this activity would require approximately 13 man-hours to accomplish.

If it is determined that the onorbit removal of the turbopumps is cost effective and desirable during engine replacement, then an additional 4.5 hours per turbopump must be added to the timeline. This will result in an expenditure of approximately 14-15 hours (two turbopumps) to complete the entire operation. Special tools for turbopump removal/installation would be required, as well as a special engine stand to withstand torque requirements.

SBOTV MAIN ENGINE REMOVE/REPLACE TIMELINE

SEQUENCE * NUMBER	TASK
4.1.4.4.3.1 4.1.4.4.3.3	ROBOTICS SECURE TOOLS & PARTS - TRANSLATE TO WORKSITE
4.1.4.4.3.4 4.1.4.4.3.7	ENGINE REMOVAL SEQUENCE
4.1.4.4.3.8 4.1.4.4.3.14	SERVICEABLE ENGINE PREPARATION
4.1.4.4.3.15 4.1.4.4.3.18	ENGINE INSTALLATION
4.1.4.4.3.19	ENGINE CHECK
4.1.4.4.3.20 4.1.4.4.3.27	ENGINE PACKAGING AND TOOL STORAGE

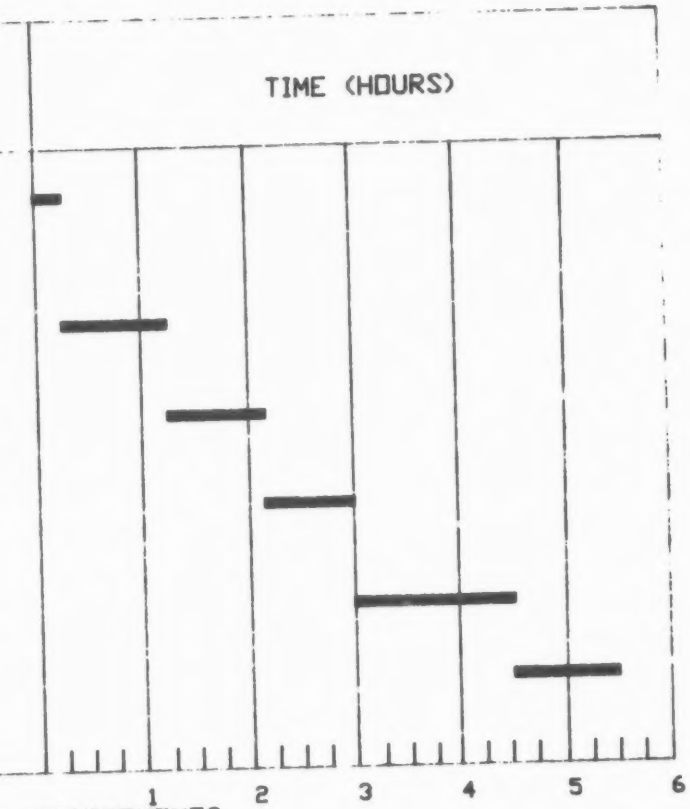

* SEQUENCE NO. FROM OTV POSTMISSION PROCESSING REQUIREMENTS

MARTIN MARIETTA

3.3.8 SERVICING CONFIGURATION - SAMPLE REQUIREMENTS SHEET

One of the requirements sheets used to define the main engine remove/replace task is shown on the facing page chart. It is indicative of the depth to which functional requirements were defined. In the course of this definition some 250 requirements sheets were generated. These requirements tabulations are provided in Appendix A to this Volume.

SAMPLE REQUIREMENTS SHEET

SEQUENCE NUMBER	TASK	REQUIREMENTS			FUNC	CREW SUPPT		MANHOURS		REMARKS
		FACILITIES	TOOLS	TRNG	TIME	EVA	EVA	EVA	TOTAL	
4.1.4.4.3	Engine Remove and Replace	SS hanger, lighting, power, signal, propellant umbilicals	Control console, SS computer, robotics, RMS, CCTV, tools/effectors, special tools, protective covers	1	5.30	3:35			3:35	
4.1.4.4.3.1	Translate robotics to tool storage area - secure tools/effectors		Control console, SS computer, robotics, CCTV	1	0:05					
4.1.4.4.3.2	Translate robotics to parts storage - secure and store parts		Control console, SS computer, robotics, CCTV	1	0:05					
4.1.4.4.3.3	Translate robotics to work site		Control console, SS computer	1	0:05					
4.1.4.4.3.4	With engine removal tool disconnect engine from interface plate		Control console, SS computer, robotics, CCTV, special tool	2	0:40	0:40			0:40	
4.1.4.4.3.5	Inflate engine removal tool		Control console, SS computer, robotics, CCTV	2	0:05	0:05			0:05	
4.1.4.4.3.6	Remove engine with robotics		Control console, SS computer, CCTV, robotics, special tool	2	0:05	0:05			0:05	
4.1.4.4.3.7	Translate RMS to work site; Attach grapple; disengage removal tool		Control console, SS computer, robotics, RMS, CCTV,	2	0:10	0:10			0:10	
4.1.4.4.3.8	Translate RMS to parts storage area and secure unserviceable engine		Control console, SS computer, RMS, CCTV,	2	0:15	0:15			0:15	
					"	"			"	
4.1.4.4.3.9	Translate robotics to parts storage area; unpackage replacement engine		Control console, SS computer, robotics, CCTV,	2	0:15	0:15			0:15	
4.1.4.4.3.10	Conduct visual inspection		CCTV, robotics	2	0:05	0:05			0:05	
4.1.4.4.3.11	Attach RMS to engine grapple; translate RMS to work site		Control console, SS computer, CCTV, robotics	2	0:15	0:15			0:15	

ORIGINAL PAGE IS
OF POOR QUALITY

3.3.8 SERVICING CONFIGURATION - AEROBRAKE CHANGEOUT

Using a single robotic arm equipped with a clamp fixture, and an aerobrake configured with a cable-actuated latch release mechanism, removal and replacement of the SBOTV aerobrake becomes a routine maintenance task.

SBOTV AEROBRAKE CHANGEOUT

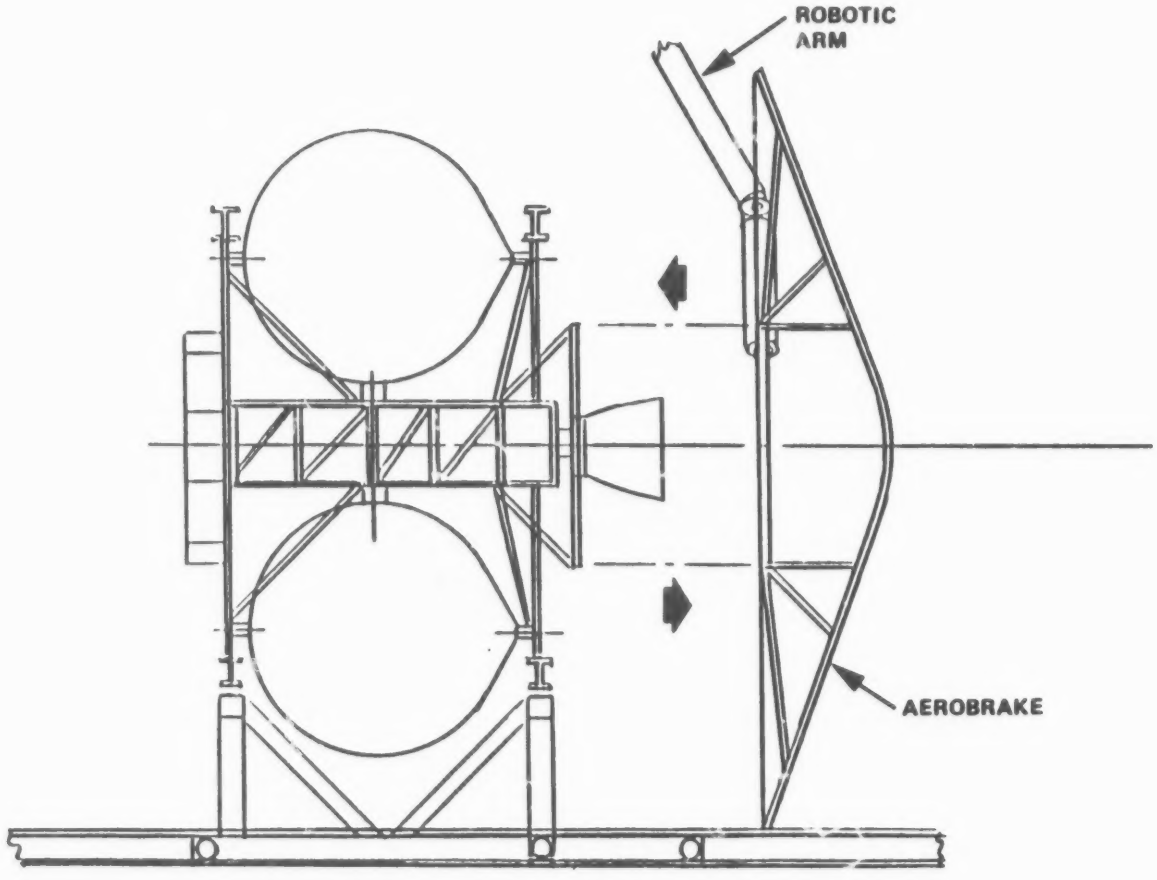

MARTIN MARIETTA

3.3.9 SUPPORT CREW ACCOMMODATIONS

Under current definition by NASA/JSC, the Aft Station Computer and Display System (ASCADS) is intended to provide test and checkout capability for any Shuttle payload, handling up to six payloads simultaneously. The ASCADS is also intended to have the capability to monitor and control payload propellant resupply operations as conducted from the Shuttle. Considering that ASCADS will probably have been developed and space-qualified by the first scheduled SBOTV flight, it is a prime candidate for use as the OTV control console. Whether it will possess sufficient capability and speed to perform automation tasks and control robotics is yet to be determined.

The facing page chart depicts one concept of the ASCADS configuration.

SBOTV SUPPORT CREW ACCOMMODATIONS

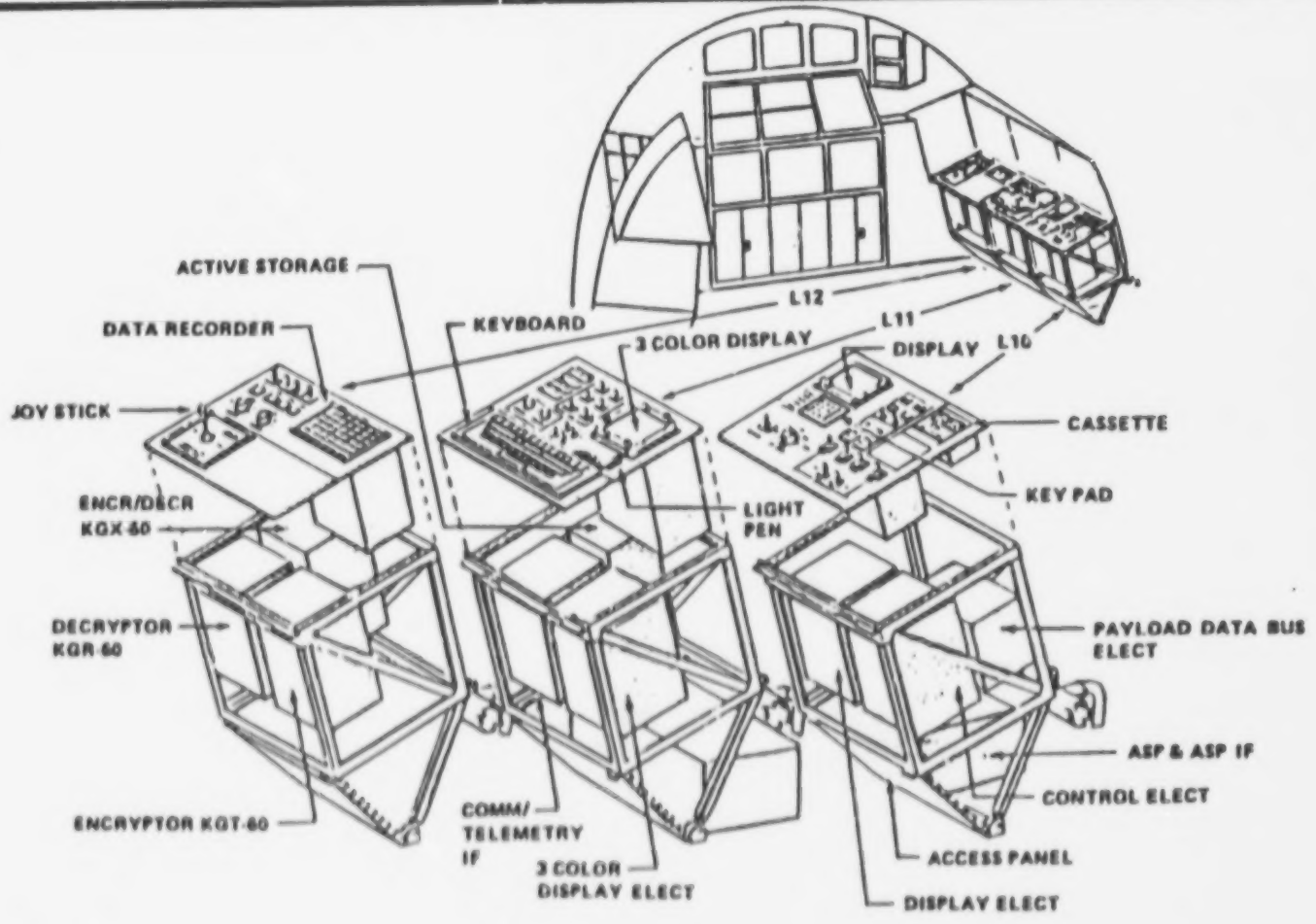

ORIGINAL PAGE IS
OF POOR QUALITY

3.3.10 FLEET ACCOMMODATION ADDITIONS

The later nominal mission model years require additional OTV stages to perform the 80K Lunar Delivery Missions. As a consequence, additional storage facilities will be needed. This storage requirement can be satisfied either by adding a storage hangar or by replicating the servicing and maintenance hangar. This decision should be the subject of further trade studies which consider cost, facility downtime, and the probability of coincident processing operations.

SBOTV FLEET ACCOMMODATIONS ADDITIONS

- LATER NOMINAL MISSION MODEL YEARS REQUIRE ADDITIONAL OTV STAGES
- STAGE SUPPORT CAN BE ACCOMPLISHED IN TWO WAYS
- ***OPTION 1: SINGLE STRING MAINTENANCE FACILITY***
  - STORAGE HANGAR
    - POWER/SIGNAL UMBILICALS
    - CARRIAGE CRADLE(S)
    - ORU STORAGE RACKS/FIXTURES
- ***OPTION 2: DUAL MAINTENANCE FACILITIES***
  - CONTINGENCY FAILURE OF ROBOTICS/CRADLES/UMBILICALS
  - PERIODS OF COINCIDENT PROCESSING OPERATIONS

3.3.10 FLEET ACCOMMODATION ADDITIONS-STORAGE HANGAR

Shown is a concept for a hangar used strictly for storage to support SBOTV fleet operations. The storage hanger uses the same truswork and inflatable hangar material as the servicing and maintenance hangar previously described.

SBOTV STORAGE HANGAR

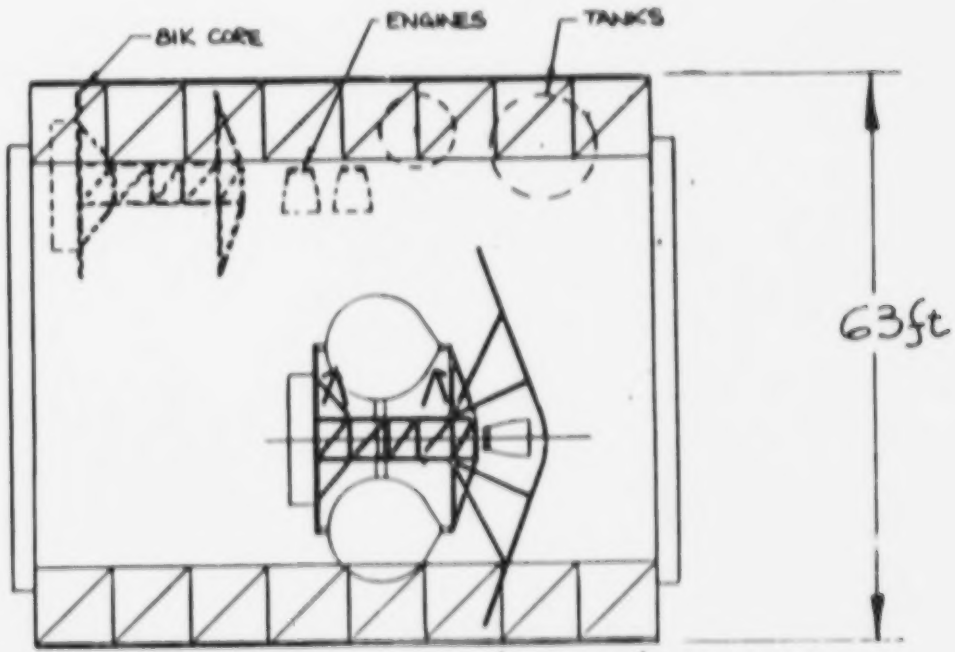

STORAGE HANGAR (72ft LONG)

MARTIN MARIETTA

3.3.11 SPACE-BASED OTV ACCOMMODATION TECHNOLOGY REQUIREMENTS

From an SBOTV accommodations point of view, these items represent the prime technology requirements where additional investigation and development is needed. Obviously, propellant transfer and storage is a critical and much needed technology, as is automation and robotics if crew support limitations are to be met. Non-destructive inspection sensors and systems technology development is necessary to provide assurance of vehicle integrity before a mission, especially if it is a manned mission.

There is also a need for some materials technology development for use in translation mechanisms. The concern is finding a material that will withstand the space environment and heavy masses and torques, and won't become "welded" to the translation rails.

SBOTV ACCOMMODATIONS - TECHNOLOGY REQMTS

- **PROPELLANT TRANSFER & STORAGE**
  - ZERO-G LIQUID TRANSFER & GAUGING
  - CRYOGENIC FLUID MINIMUM FORCE QUICK DISCONNECT
  - VANE/CHANNEL ACQUISITION TANKS

- **AUTOMATED ROBOTIC SERVICING & MAINTENANCE**
  - DUAL ARM ROBOTICS (OPERATING CONJOINTLY)
  - ARTIFICIAL INTELLIGENCE SOFTWARE SYSTEMS
  - "OPTICAL BENCH" STRONGBACK

- **NONDESTRUCTIVE INSPECTION SENSORS & SYSTEMS**
  - LEAK DETECTION
  - STRUCTURAL FATIGUE
  - BEARING SURFACE WEAR
  - MATERIAL DEGRADATION/DISCONTINUITY

- **MATERIALS FOR TRANSLATION MECHANISMS**
  - CRADLE CARRIAGE
  - SPACE CRANE
  - ROBOTIC ARM

3.3.12 RECOMMENDED SPACE-BASED OTV DESIGN CHANGES

After completing functional flow and functional requirements analyses and accommodations design and optimization, these were the changes that we recommended to the Task 2 and 3 design groups so as to facilitate OTV space-based operations. These changes shall be reviewed in detail in the following charts.

RECOMMENDED SBOTV DESIGN CHANGES

- **OCTAGONAL AVIONICS ASSEMBLY "RING"**
  - RADIATOR & GPS RECEIVER MOUNTING
- **PAYLOAD INTERFACE MECHANISM**
  - PAYLOAD
  - OTV SECOND STAGE
  - OMV (GEO SERVICING)
- **FOLDING AEROBRAKE WITH MOUNTING RING**
- **CRADLE AND CRANE INTERFACES**
  - CRADLE INTERFACES (4) ON LH_2 TANK STRUTS
  - CRANE INTERFACES (2) ON LO_2 TANK STRUTS
- **CRYOGENIC FLUID QUICK DISCONNECT**
  - LH_2 AND LO_2 TANKS
  - RCS THRUSTERS (AT AEROBRAKE RING INTERFACE)
  - MAIN ENGINES

3.3.12 RECOMMENDED SPACE-BASED OTV DESIGN CHANGES - OCTAGONAL AVIONICS ASSEMBLY

The purpose of changing to the octagonal avionics ring was to permit it to be launched in one piece already attached to the core structure. The layout of the black boxes minimizes electrical harness lengths, permits their change out using MMS-type mounts and evenly distributes mass. This configuration also permits the radiators to be moved from propellant tanks to the ring, providing thermal improvement.

SBOTV OCTAGONAL AVIONICS ASSEMBLY

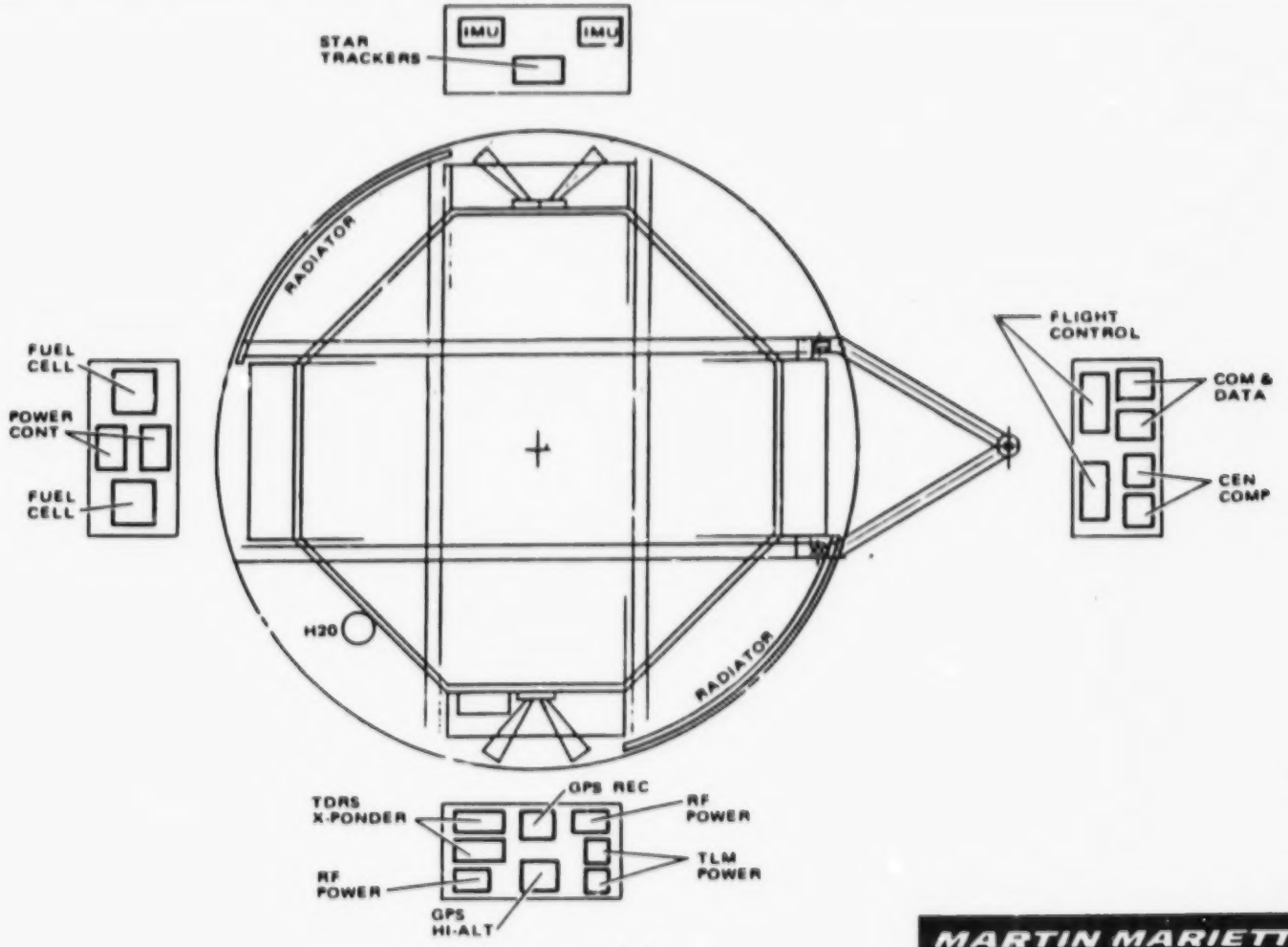

MARTIN MARIETTA

3.3.12 RECOMMENDED SPACE-BASED OTV DESIGN CHANGES - PAYLOAD INTERFACE ASSEMBLY

The three-fingered configuration of this docking mechanism was selected due to its versatility in mating with the most popular payload interface configurations. It will mate with the MMS three-pin design, and adapt to most sizes of circular payload interface rings. Its adjustment and clamp action is driven by three acme threaded shafts powered from a single bevel gear, producing the action of the jaws of a chuck. For docking OTV/OMV or OTV/MMS, the end of the fingers would have conical recesses, where as for circular interface rings, a straight V recess across could be employed. Either configuration produces a semi-soft dock. The retractable docking pin is shown on the next chart.

SBOTV PAYLOAD INTERFACE ASSEMBLY

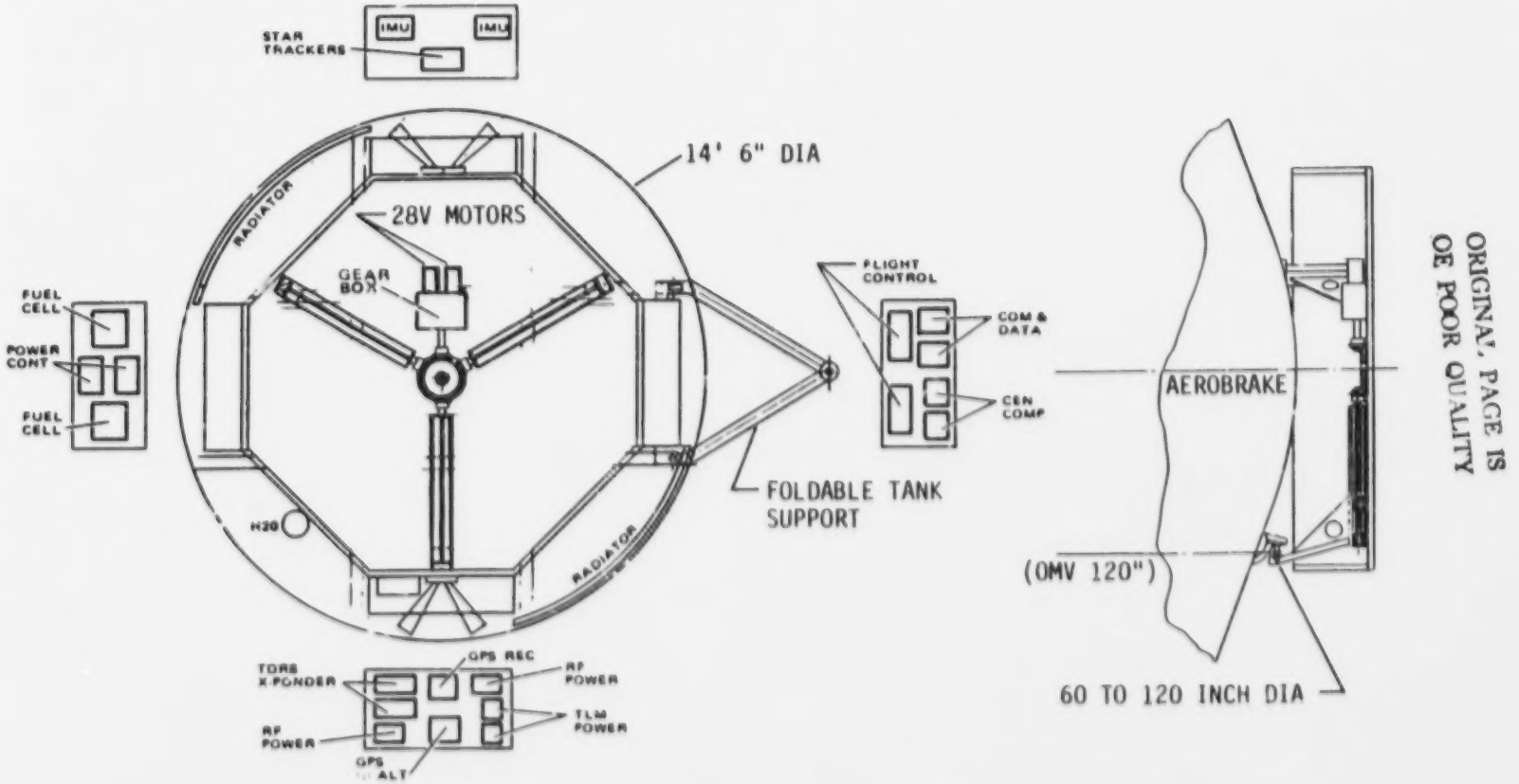

ORIGINAL PAGE IS OF POOR QUALITY

MARTIN MARIETTA

3.3.12 RECOMMENDED SPACE-BASED OTV DESIGN CHANGES - AEROBRAKE DEPLOYABLE/RETRACTABLE INTERFACE MECHANISM

Three of these deployable/retractable docking pins, mounted in the rigidized portion of the aerobrake, would be evenly spaced producing an MMS configuration. The end of the pin would be the interface of OTV/OTV, while the OMV interface would be made by encircling the pin halfway down its length.

SBOTV AEROBRAKE DEPLOYABLE/RETRACTABLE INTERFACE MECHANISM

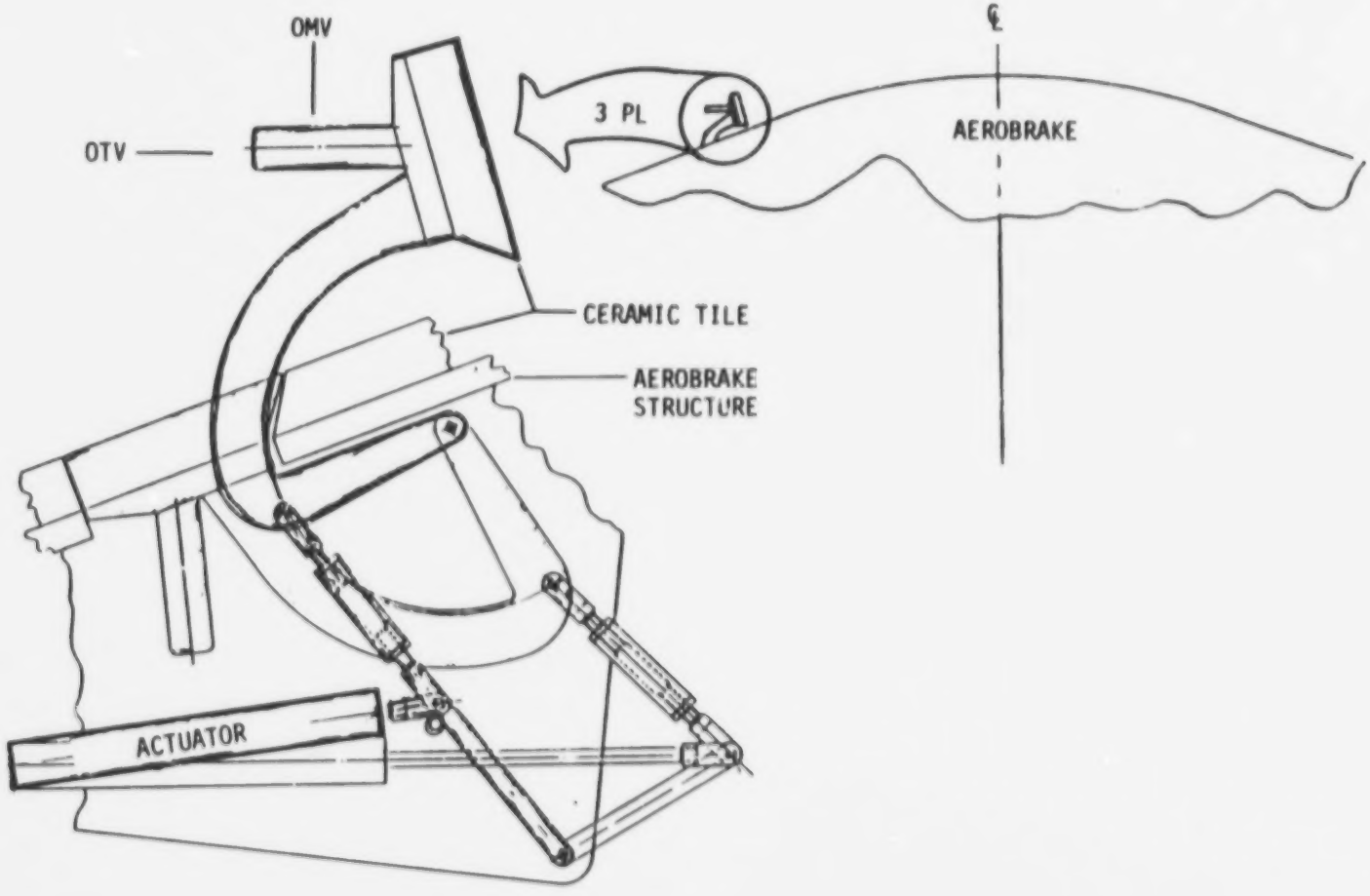

MARTIN MARIETTA

3.3.12 RECOMMENDED SPACE-BASED OTV DESIGN CHANGES - AEROBRAKE RING INTERFACE MECHANISM

The unwieldy size of the aerobrake makes EVA removal/replacement impractical. The use of robotics dictates that changeouts of major components of the vehicle be made as simple as possible (no nuts and bolts). This aerobrake interface mechanism would require the robotic arm to produce a clamp-type motion at a single point on the aerobrake interface ring. This motion would effectively actuate all 12 latches simultaneously, leaving the aerobrake free to be pulled from the core structure. This clamp action enables the same single robotic arm to perform that removal operation.

SBOTV AEROBRAKE RING INTERFACE MECHANISM

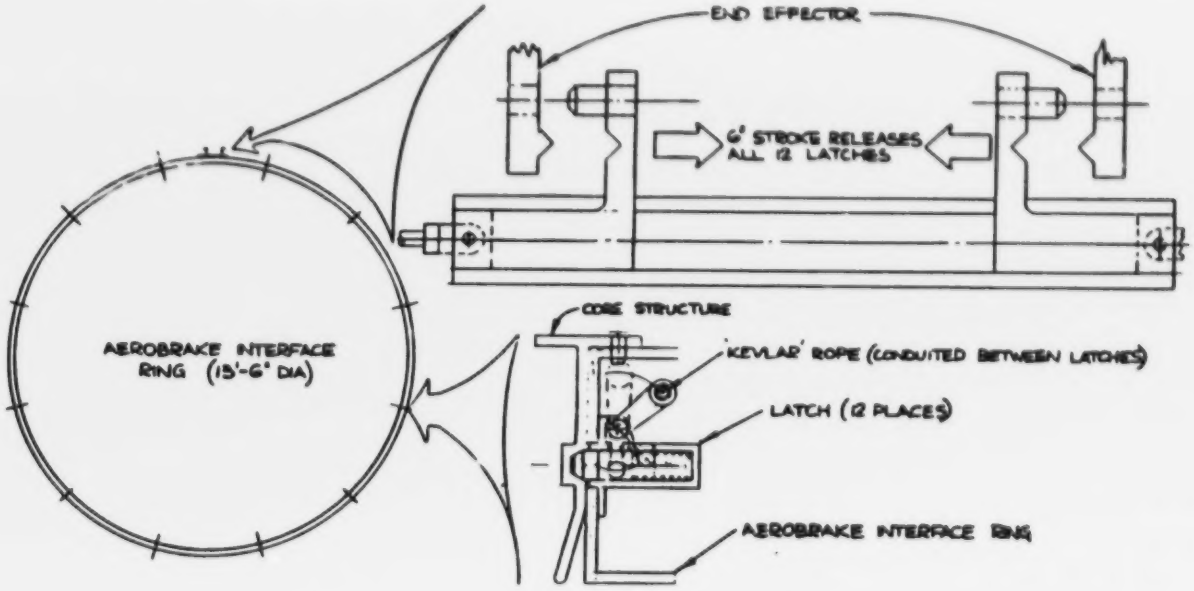

MARTIN MARIETTA

3.3.12 RECOMMENDED SPACE-BASED OTV DESIGN CHANGES - FOLDING AEROBRAKE

There is currently no way to launch a piece of hardware to orbit measuring 44 feet diameter. The design on the facing page chart enables the aerobrake to be folded into a configuration that does not exceed 14' 6" diameter, and requires a minimum cargo bay length (under 10 feet). The structure consists of an interface ring approximately 13 feet in diameter around which are spaced 12 trusses. Each truss consists of a rib supported by two struts, which, when folding, provides for the fold of exterior flexible material. The view on Arrow A shows the end of a strut. When the truss is unfolded and connected to the interface ring, a clamp action on the latch will retreat the pins from the interface ring fitting, allowing the truss to be folded.

SBOTV FOLDING AEROBRAKE

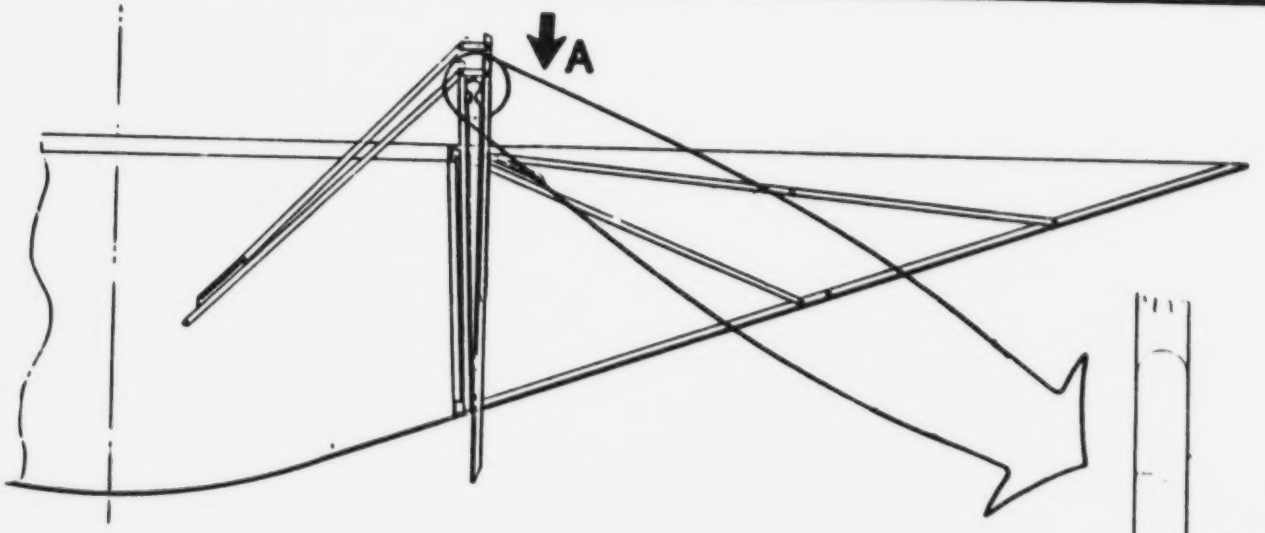

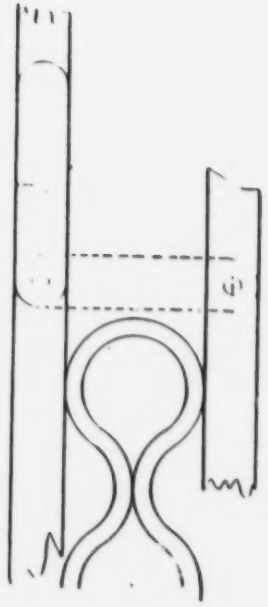

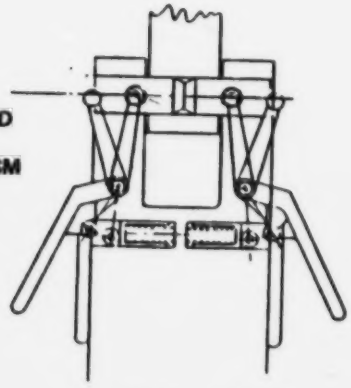

VIEW ON ARROW A

MARTIN MARIETTA

3.3.12 RECOMMENDED SPACE BASED OTV DESIGN CHANGES - AEROBRAKE UNFOLD/REFOLD FIXTURE

The design of the foldable aerobrake is similar to an umbrella; you can't deploy one rib at a time. For this reason, the hinged telescoping arm shown in the viewgraph would require to be repeated at 12 places so that simultaneous movement of all 12 ribs can be achieved. As the ribs move to their extended position, the struts are guided by their engagement in the slotted plates.

The aerobrake is only refolded onorbit when its mission life is completed. Once flexible covering is exposed to the atmospheric reentry, it will rigidize. When the telescoping arms are retracted, the once flexible materials will tend to crack and split. It may even be necessary to pre-score the material between the ribs at several locations just before folding to insure a clean split.

SBOTV AEROBRAKE UNFOLD/REFOLD FIXTURE

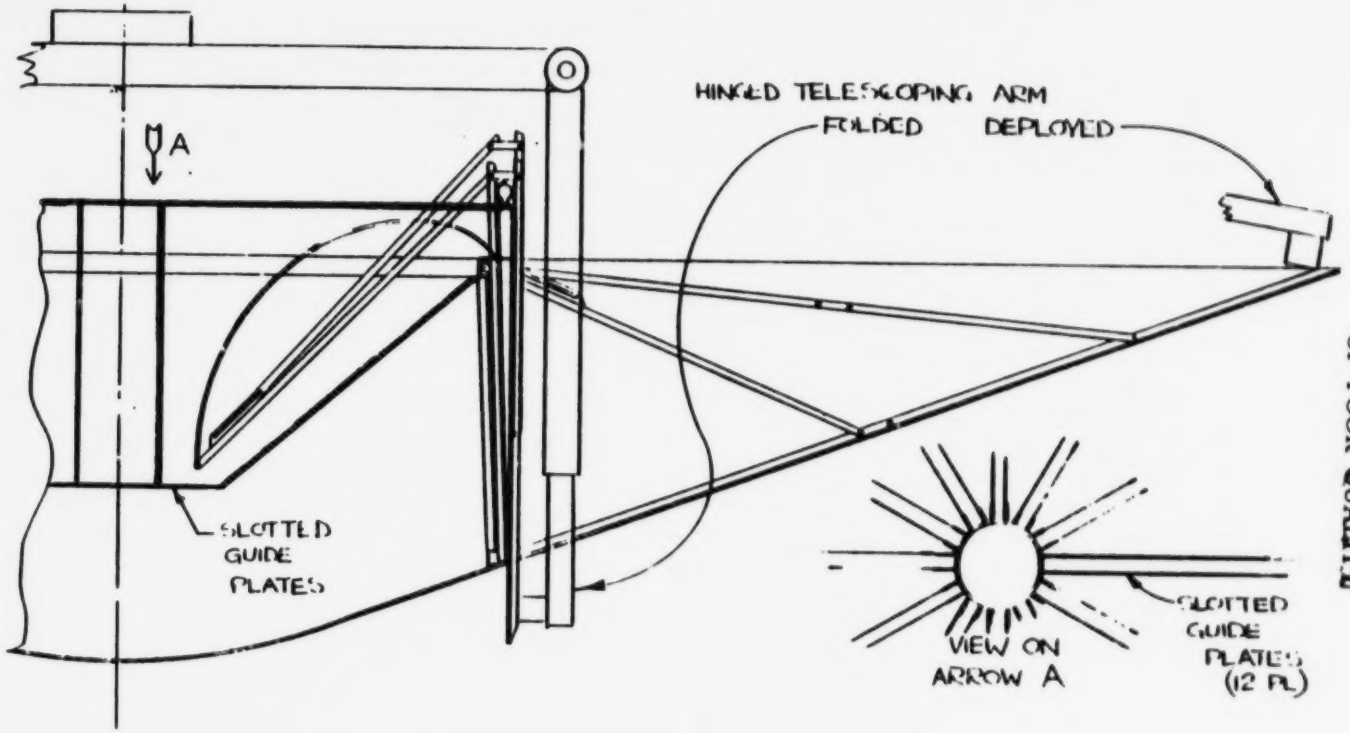

ORIGINAL PAGE IS OF POOR QUALITY

MARTIN MARIETTA

3.3.12 RECOMMENDED SPACE-BASED OTV DESIGN CHANGES - CRYOGENIC FLUID QUICK DISCONNECT

This conceptual quick disconnect is shown not yet fully engaged. When fully engaged, both poppets fully open and the pneumatic cam latch aligns with its mating groove in the probe. When activated, the cam engages the groove in the probe and its tapered surface produces a preload into the probe engagement. The probe side structurally attaches to the engine, tank, or aerobrake (ACS system). The configuration shown would only be for propellant tanks as the engine would require no poppet valve in the probe side, while the ACS system would require no poppet valves at all. The nose of the probe is shaped to minimize the chances of any misalignment from damaging the seals. Note the seals are engaged prior to the poppets opening.

SBOTV CRYOGENIC FLUID QUICK DISCONNECT

OPEN DESIGN ISSUES

1. THERMALLY ISOLATED FROM STRUCTURE
2. THERMAL INSULATION
3. SEAL DESIGN
4. MATERIALS

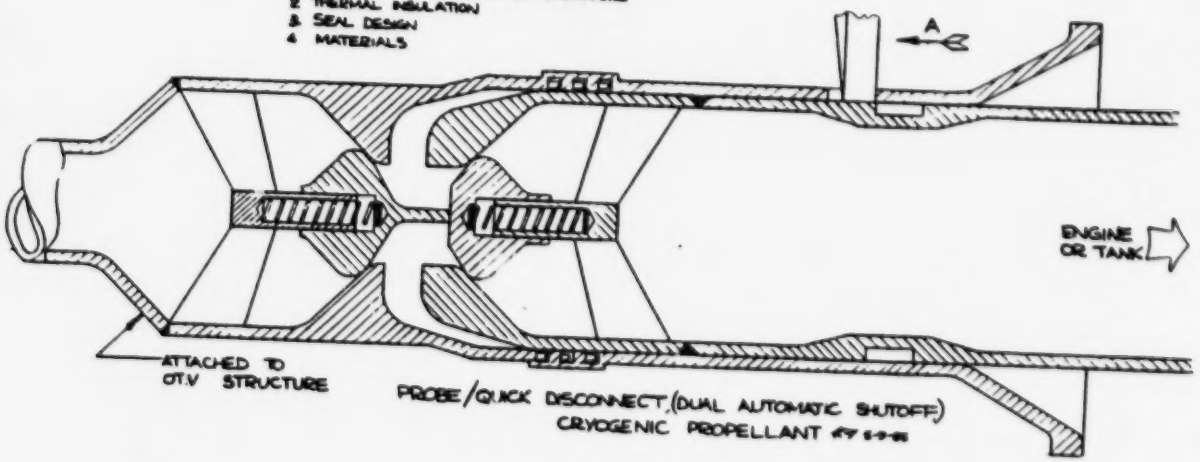

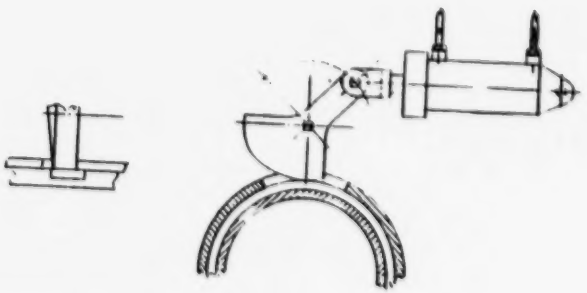

VIEW ON ARROW A

ORIGINAL PAGE IS
OF POOR QUALITY

3.3.12 RECOMMENDED SPACE-BASED OTV DESIGN CHANGES - MAIN ENGINE MATE/DEMATE MECHANISM

This mechanism employs an engine interface plate onto which are mounted six quick disconnect probes of the design shown on the previous chart. On the opposite side of the interface plate to the probes are mounted the engine gimbal and its two gimbal actuators. This enables the engine to be installed just like a plug-in module.

SBOTV MAIN ENGINE MATE/DEMATE MECHANISM

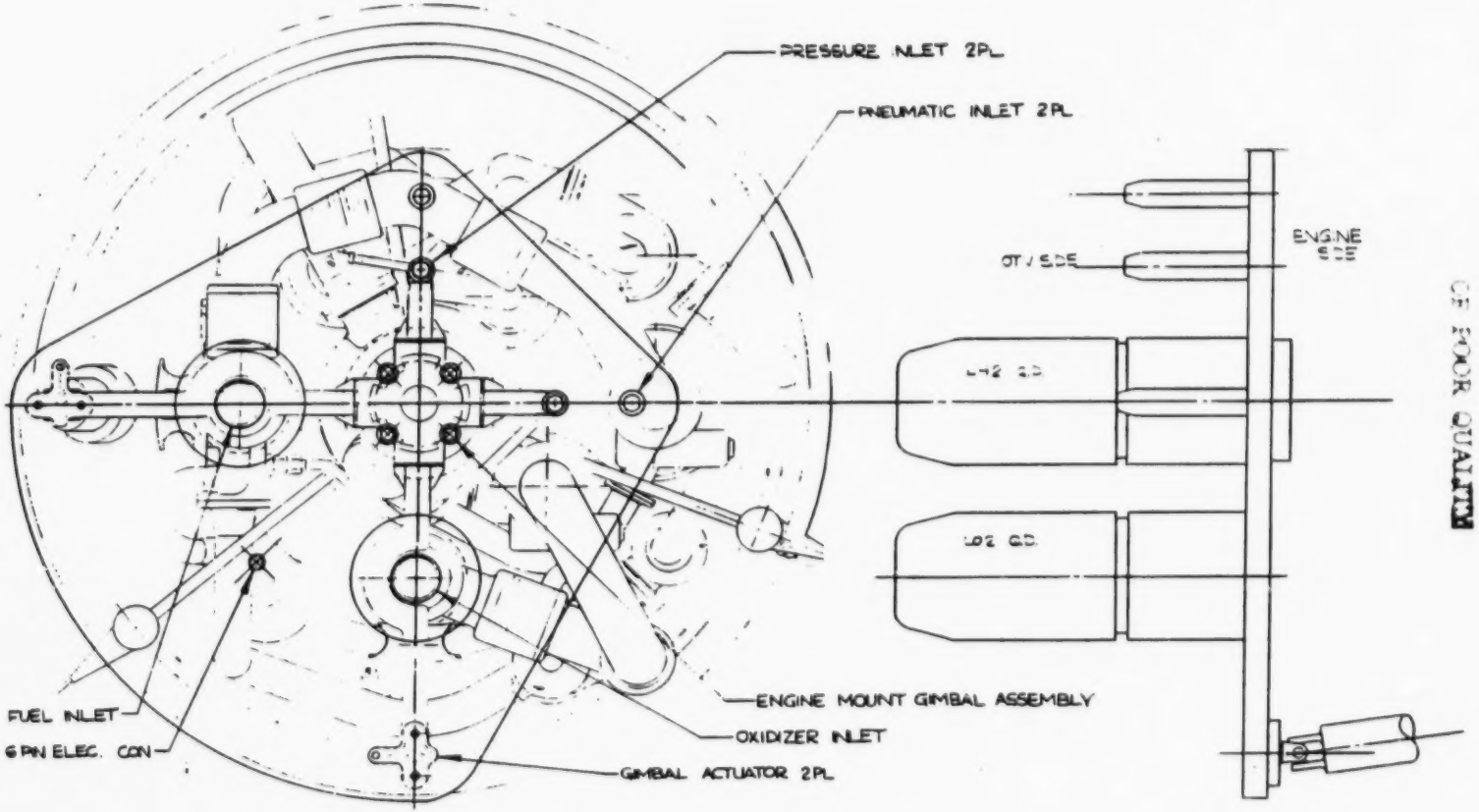

ORIGINAL PAGE IS
OF POOR QUALITY

3.3.12 RECOMMENDED SPACE-BASED OTV DESIGN CHANGES - MAIN ENGINE REMOVE/REPLACE FIXTURE

The chart shows an expandable plug which is shaped to mate with the inside of the engine. When the plug is inserted and expanded, the pneumatic cam latches on the quick disconnect (previous chart) are actuated, leaving the engine free to be pulled back by the robotic arm. This method would allow engine changeout, without removing the aerobrake, using a single robotic arm.

SBOTV MAIN ENGINE REMOVE/REPLACE FIXTURE

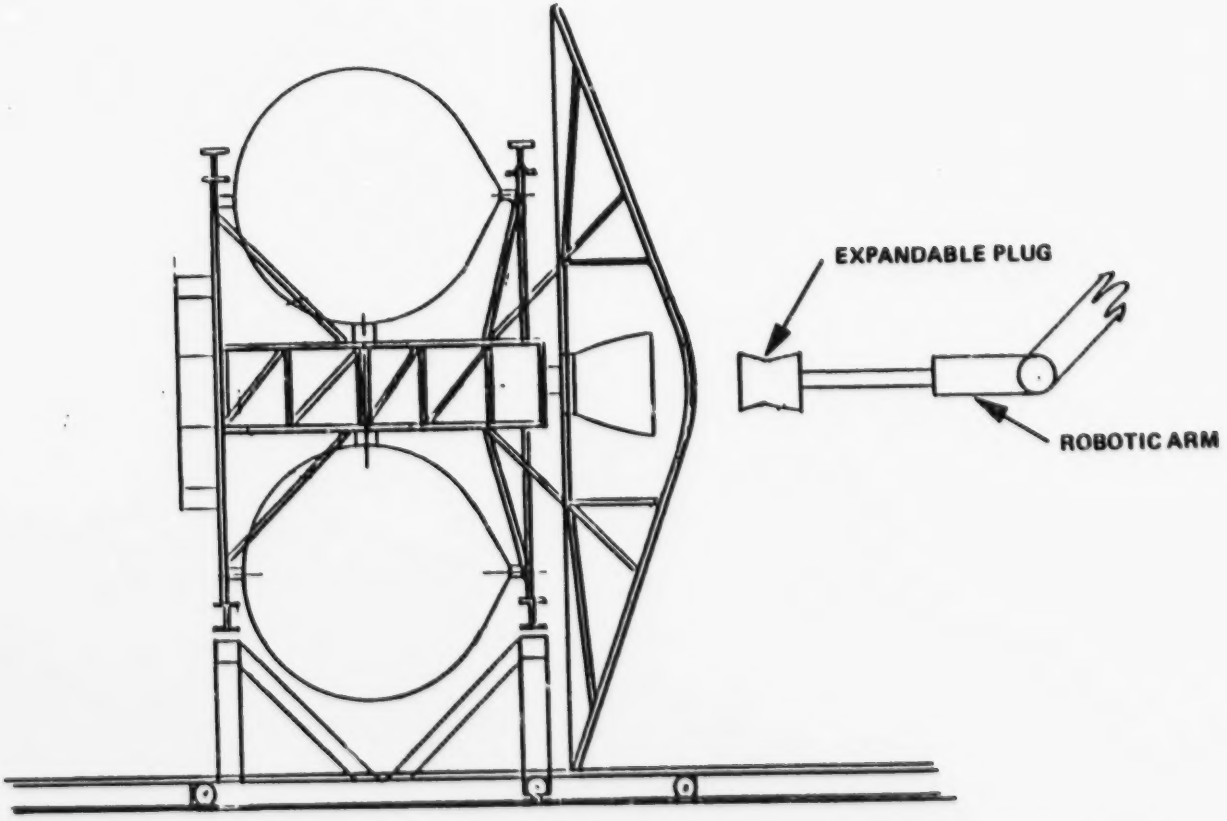

MARTIN MARIETTA

PRECEDING PAGE BLANK NOT FILMED

4.0 GROUND-BASED OTV ACCOMMODATIONS AT SPACE STATION

4.1 GROUND-BASED OTV ACCOMMODATIONS AT SPACE STATION OVERVIEW

Under Study Methodology, this effort was defined as Task 5.3. Task 5.3 is concerned with a pure Ground-Based OTV operating in conjunction with Space Station as a consequence of Shuttle weight and/or volume limitations on a single flight, or the need for multi-staged operations.

For the Ground-Based OTV, the efforts performed under Task 5.3 are similar to those performed under Task 5.2 including a requirements definition activity and an accommodations design and optimization activity. The degree of effort is somewhat less as a consequence of the reduced process flow steps. For example, initial assembly and onorbit maintenance are not required.

As can be seen on the Study Methodology overview chart (Paragraph 1.3), Task 5.3 begins substantially after Task 5.2.2, allowing the work performed under Task 5.2.2 to be utilized here, with additions and modifications as necessary.

Task 5.3 provides outputs to Task 2, for design optimization, to Task 6, for option assessment, and to Task 5.4 for accommodations assessment.

TASK 5.3 GROUND BASED OTV ACCOMMODATIONS OVERVIEW

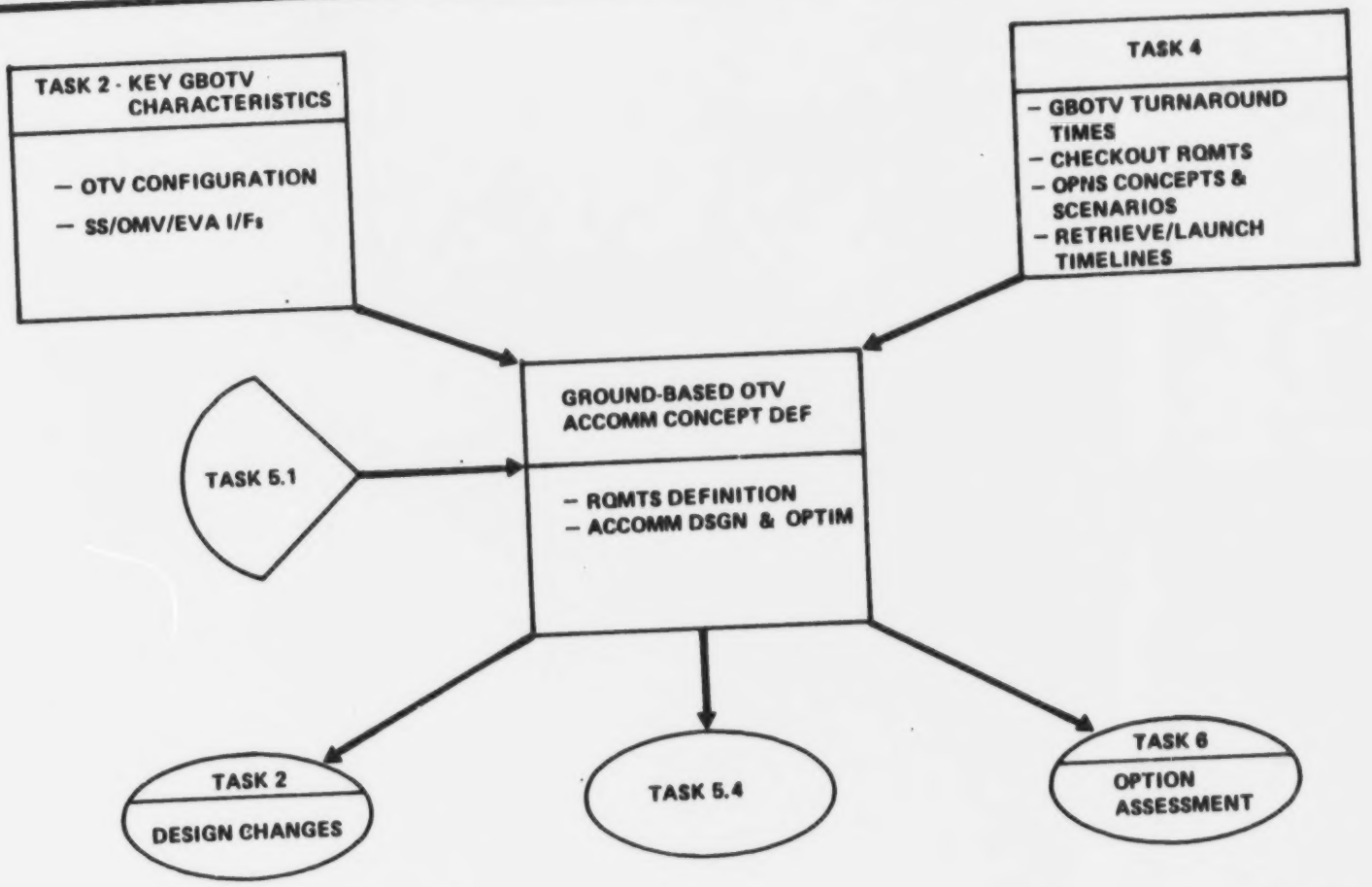

MARTIN MARIETTA

4.2 GROUND-BASED OTV GROUND RULES

In addressing the Ground-Based OTV problem, we ground ruled that the GBOTV would operate in conjunction with the FOC Space Station since the IOC Space Station wouldn't have facilities to handle retrieval, launch, etc. Another ground rule established that the only missions the GBOTV would perform from Space Station would be those requiring more than one shuttle flight if done from the ground. We further ground ruled that the GBOTV would be delivered fully assembled to orbit by the Shuttle, and transferred from Shuttle orbit to Space Station by the OMV. The GBOTV would either be partially or fully loaded with propellant, dependent upon whether Space Station had an operational cryogenic propellant tank farm. While at Space Station, the only operations performed would be payload/OMV mating, propellant resupply (if available), checkout, launch, retrieval, and GBOTV disassembly for Earth return.

GBOTV GROUND RULES

- **GROUND-BASED OTV OPERATES IN CONJUNCTION WITH *FOC SPACE STATION***
  - ONLY MISSIONS REQUIRING > 1 SHUTTLE FLIGHT
- **SHUTTLE DELIVERY TO ORBIT / OMV DELIVERY TO SPACE STATION**
  - GBOTV IN GENERAL PURPOSE ACC
    - FULLY ASSEMBLED
    - PARTIAL/FULL PROPELLANT LOAD
- **OPERATIONS PERFORMED AT SPACE STATION**
  - OMV / OTV INITIAL TRANSFER AND POST MISSION RETRIEVAL
  - PAYLOAD / OTV MATING AND OMV / OTV MATING
  - OTV PROPELLANT RESUPPLY (***OPTIONAL***) & CHECKOUT
  - OMV/OTV/PAYLOAD STACK LAUNCH & RETRIEVAL
  - OTV DISASSEMBLY (***AFTER EVERY MISSION***)
    - AEROBRAKE DETACH & DISASSEMBLY
    - LH_2 & LO_2 TANK REMOVAL
    - STOWAGE (AWAIT SHUTTLE REVISIT)

4.3 RESULTANT GROUND BASED OTV MISSION MODEL - COMPOSITION SUMMARY (REVISION 8)

This resultant effect of the previous ground rules upon the Revision 8 Mission Model is shown on the facing page chart. The shaded horizontal lines result from deletion of missions that can be accomplished from the ground in one Shuttle flight or that occur before the FOC Space Station date.

In certain cases, a particular mission can be accomplished in one Shuttle launch, but not one retrieval. In those cases, we assumed retrieval would be performed at Space Station. Those cases are identified by a double asterisk.

For the nominal mission model, these ground rules reduce the number of missions from 257 to 110, and for the low, from 145 to 53. It is also interesting to note that these ground rules result in the majority of flights being in support of DoD missions.

GBOTV * MISSION MODEL COMPOSITION REV. 8

* OPERATING IN CONJUNCTION WITH SPACE STATION

PAYLOAD NO SERIES	MISSION GROUP	WEIGHT (LB) UP/DOWN	LENGTH (FT)	MISSION MODEL LOW	MISSION MODEL NOM	IOC
~~13000~~	~~EXPERIMENTAL GEO PLATFORM~~	~~12000/0~~	~~30~~	~~1~~	~~1~~	~~2000/1995~~
13000	OPERATIONAL GEO PLATFORM	20000/0	35	5	6	2004/1998
13000	UNMANNED GEO PLAT. SERVICING**	7000/4500 **	9	1 **	~~1~~ 0	2001/~~1996~~
15000	MANNED GEO SORTIE **	7500/7500 **	10	3 **	17 **	2008/2002
~~15000~~	~~GEO SERVICE STATION ELEMENTS~~	~~13000/0~~	~~15-20~~	~~2~~	~~2~~	~~2002/1998~~
~~15000~~	~~GEO SERVICE STA. LOGISTICS~~	~~12000/2000~~	~~15~~	~~5~~	~~26~~	~~2004/1998~~
17000	PLANETARY	~~2000~~-40000/0	5-35	6 *0*	~~14~~ *1*	*- /1998* ~~1994/1994~~ *2009*
17000	UNMANNED LUNAR	5000-20000/0	20	~~2~~ *1*	~~2~~ *1*	~~2007~~/2001
17000	MANNED LUNAR SORTIE	80,000/15,000	50	0	3	2015/2006
17000	LUNAR BASE ELEMENTS	80,000/0	53	0	3	2020/2008
17000	LUNAR BASE SORTIE/LOGISTICS	80,000/10,000	60	0	6	2021/2009
~~18000~~	~~MULTIPLE GEO PAYLOAD DELIVERY~~	~~12000/2000~~	~~25~~	~~46~~	~~79~~	~~1994/1994~~
18000	LARGE GEO SATELLITE DELIVERY	20000/0	20-35	~~3~~ *2*	~~7~~ *6*	2001/1997 *2001/1998*
19000	DOD (GENERIC)	12000-20000 (EQUIV.)		~~68~~ *40*	~~85~~ *65*	1999/1994
				~~142~~ *52*	~~252~~ *108*	*2001*
				~~3~~ *1*	5 *2*	~~1998~~/1997
			TOTALS	~~145~~ *53*	~~257~~ *110*	

** SHUTTLE LAUNCH/SPACE STATION RETRIEVE

MARTIN MARIETTA

ORIGINAL PAGE IS OF POOR QUALITY

4.3 RESULTANT GROUND-BASED OTV MISSION MODEL - NOMINAL MODEL SUMMARY (REVISION 8)

The horizontally shaded lines indicate deletions of mission classes that can be performed from the ground in one Shuttle flight. The vertically shaded lines indicate deletions of missions prior to the FOC Space Station availability (1997). The remaining deletions are individual missions that also can be accomplished from the ground in one Shuttle flight.

GBOTV *NOMINAL MISSION MODEL SUMMARY-REV 8

*** OPERATING IN CONJUNCTION WITH SPACE STATION**

MISSIONS	PLD NO.	MISSIONS/FY																		
		93	94	95	96	97	98	99	00	01	02	03	04	05	06	07	08	09	10	TOT
GEO PLATFORM			0	1	0	0	1	0	1	0	0	0	0	1	0	1	0	1	1	7 6
PLANETARY			1	0	1	2	1	2	0	0	1	1	0	0	2	0	2	1	0	14 1
MULTIPLE PL DEL			3	3	5	3	4	5	6	5	6	4	5	4	5	4	5	6	6	79
IND. GEO SATELLITES			0	0	0	1	0	1	0	1	0	1	0	0	1	1	0	1	0	7 6
UNMAN. PLAT SERV.					1	0	0	0	0	0	0	0	0	0	0	0	0	0	0	1 0
MANNED GEO SORTIES **											1	2	2	2	2	2	2	2	2	17**
GEO SERV. STATION ELEMENTS							1	0	0	0	1	0	0	0	0	0	0	0	0	2
GEO SERV. STA. LOGISTICS							2	2	2	2	2	2	2	2	2	2	2	2	2	26
UNMANNED LUNAR										1	0	1	0	0	0	0	0	0	0	2 1
MANNED LUNAR SORTIES															1	1	1	0	0	3
LUNAR BASE ELEMENTS																	2	1	0	3
LUNAR SORTIE/LOGISTICS																		2	4	6
DOD			5	5	5	5	5	5	5	5	5	5	5	5	5	5	5	5	5	85 65
REVISED SUBTOTAL						*1*	*7*	*5*	*6*	*6*	*6*	*9*	*7*	*8*	*9*	*10*	*10*	*12*	*12*	*108*
SUBTOTAL			9	9	12	11	14	15	14	14	16	16	14	14	18	16	19	21	20	252
REFLIGHTS			0	0	0	1	0	0	0	1	0	0	1	0	0	1	0	0	1	5 2
REVISED TOTAL		0				*1*	*7*	*5*	*6*	*6*	*6*	*9*	*8*	*8*	*9*	*10*	*10*	*12*	*13*	*110*
TOTAL			9	9	12	12	14	15	14	15	16	16	15	14	18	17	19	21	21	257

** SHUTTLE LAUNCH/SPACE STATION RETRIEVE

4.3 RESULTANT GROUND-PASED OTV MISSION MODEL - LOW MODEL SUMMARY (REVISION 8)

For the low mission model, deletions were made similar to those for the nominal mission model, only in this case, the FOC Space Station date is 1999. It is interesting to note that as a consequence of these ground rules, the first GBOTV flight from Space Station per the low mission model does not occur until 2001, even though the station could be available in 1999.

GBOTV * LOW MISSION MODEL SUMMARY - REV. 8

** OPERATING IN CONJUNCTION WITH SPACE STATION*

MISSIONS	PLD NO.	MISSIONS/FY																		
		93	94	95	96	97	98	99	00	01	02	03	04	05	06	07	08	09	10	TOT
GEO PLATFORM									†	0	0	0	1	0	0	1	1	1	1	6 5
PLANETARY			†	0	†	0	0	†	0	0	0	†	0	0	†	0	0	†	0	6 0
MULTIPLE P/L DEL			2	3	†	3	3	2	3	3	2	4	3	2	3	2	4	3	3	46
IND. GEO SATELLITES										1	0	0	0	0	†	0	0	0	1	3 2
UNMAN GEO PLAT SERV. **										1	0	0	0	0	0	0	0	0	0	1 **
GEO SERV. STATION ELEMENTS											1	0	0	0	0	1	0	0	0	2
GEO SERV. STA. LOGISTICS																	1	1	1	3
UNMANNED LUNAR																†	0	1	0	2 1
MANNED GEO SORTIES **																	1	1	1	3 **
MANNED LUNAR SORTIES																				0
LUNAR BASE ELEMENTS																				0
LUNAR SORTIE/LOGISTICS																				0
DOD			4	4	4	4	4	4	4	4	4	4	4	4	4	4	4	4	4	68 40
REVISED SUBTOTAL								*0*	*0*	*6*	*4*	*4*	*5*	*4*	*4*	*5*	*6*	*7*	*7*	*52*
SUBTOTAL			7	7	6	7	7	7	8	9	7	9	9	7	10	9	11	12	10	142
REFLIGHTS					†	0	0	0	0	0	0	0	0	†	0	0	0	0	1	3 1
REVISED TOTAL								*0*	*0*	*6*	*4*	*4*	*5*	*4*	*4*	*5*	*6*	*7*	*8*	*53*
TOTAL			7	7	6	7	7	7	8	9	7	9	9	8	10	9	11	12	11	145

**** SHUTTLE LAUNCH/SPACE STATION RETRIEVE**

4.4 GROUND-BASED OTV BASIC ACCOMMODATION PARAMETERS

As with the SBOTV, the Space Station GBOTV accommodations must provide large volumes for storage and operations, and mechanisms to control long and large masses. At issue is whether a cryogenic propellant tank farm will be provided. Theoretically the GBOTV could be delivered to Space Station with a full propellant load However, boiloff will occur, and whether propellant resupply will be needed is dependent on how closely GBOTV delivery to Space Station can be scheduled in combination with its subsequent launch. In the case of the 80K Lunar Delivery Missions, where three GBOTV stages are required, propellant resupply at some level is required.

GBOTV BASIC ACCOMMODATION PARAMETERS

ACCOMMODATIONS MUST PROVIDE:

- ***PROPELLANT TANK FARM (OPTIONAL)***
- ***LARGE VOLUMES FOR PARTIAL GBOTV DISASSEMBLY OPERATIONS***
  - PROPELLANT TANKS
  - AEROBRAKE
- ***MECHANISMS TO HANDLE LONG AND LARGE MASSES***
  - DRIVER MISSIONS
    - CRYO/80K LUNAR ~275K LBS & 130 FEET LONG (NOMINAL MODEL ONLY)
    - CRYO/20K GEO ~ 100K LBS & 62 FEET LONG
- ***LARGE VOLUMES TO STORE PARTIALLY DISASSEMBLED GBOTVs AWAITING EARTH RETURN***

4.5 GROUND BASED OTV FUNCTIONAL FLOW OVERVIEW

The functional flow generated for the Ground Based OTV operating at Space Station is very similar to that of the Space-Based OTV. There is no provision, however, for initial assembly or servicing and maintenance. Initial delivery is accomplished by retrieval of the OTV from the orbiter by the OMV prior to payload mating. An optional propellant tank farm may be essential if long delays are encountered prior to launch of the total vehicle stack or in abort situations. These accommodations provide for growth into Space Based OTV accommodations.

These functional flows are treated in greater detail in Appendix A.

GBOTV FUNCTIONAL FLOW – OVERVIEW

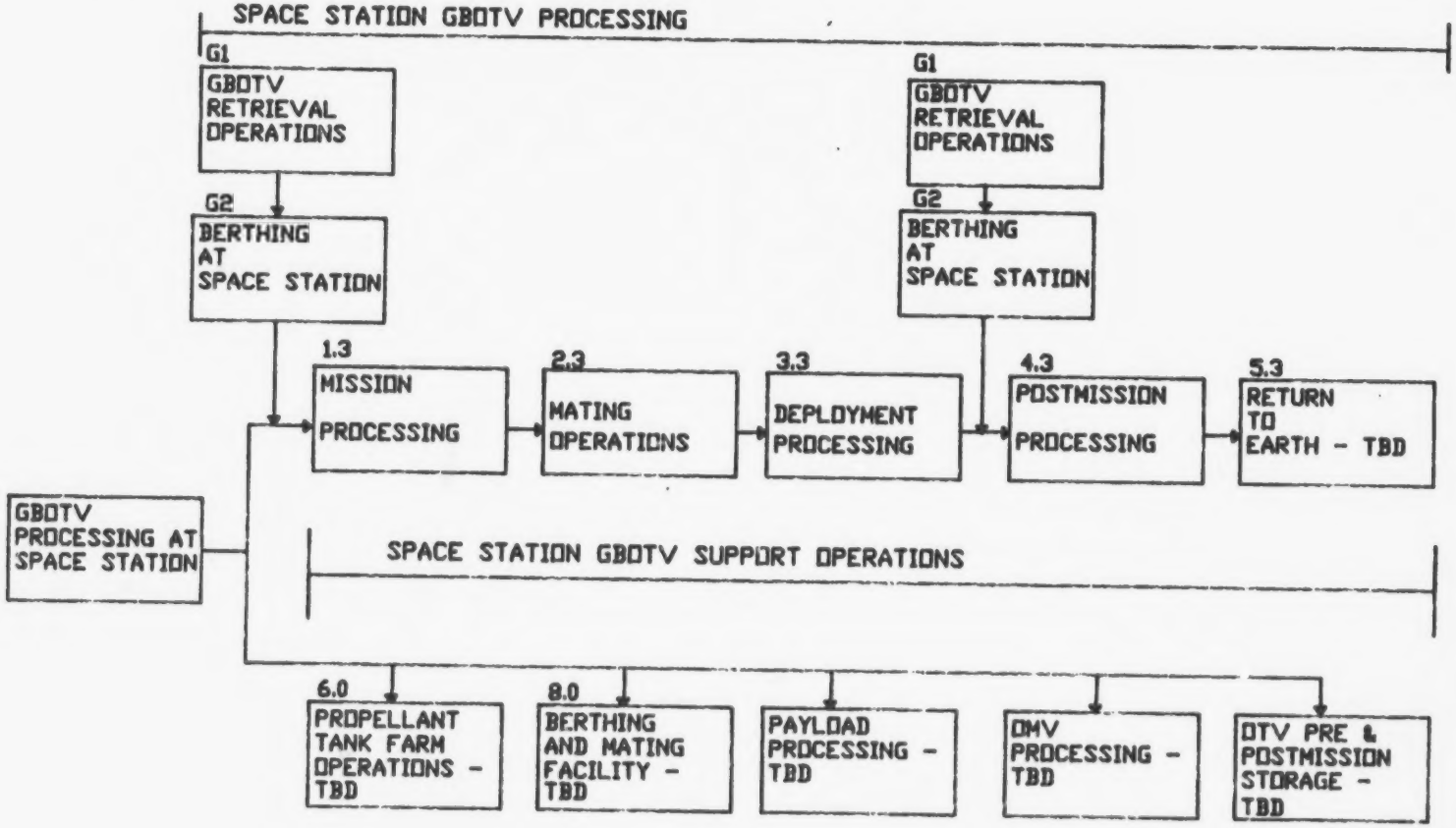

4.6 GROUND BASED OTV/SPACE STATION FUNCTIONAL REQUIREMENTS

From the functional flow analyses performed, functional requirements were generated as shown on the following four charts. These requirements basically follow the SBOTV requirements with the following exceptions: meteoroid protection is not required; the GBOTV is not assembled, serviced, or maintained onorbit; and the GBOTV is returned to Earth after every mission.

Delivery of the GBOTV involves retrieval of the STS delivered GBOTV by the OMV, installation of the stack in cradles, and demating of the OMV. Checkout is performed to verify the integrity of the GBOTV systems. Storage of the GBOTV may be necessary if the payload has not yet been delivered to Space Station, or if payload or OMV problems have been encountered. Storage is also necessary for the partially disassembled GBOTVs awaiting Earth return.

GBOTV/SPACE STATION FUNCTIONAL REQUIREMENTS

- **DELIVERY**
  - RETRIEVE GBOTV/OMV
  - INSTALL GBOTV/OMV IN CRADLES
  - DEMATE OMV FROM GBOTV
- **CHECKOUT**
  - CHECKOUT GBOTV
  - STOW GBOTV
- **STORAGE**
  - PROVIDE STOWAGE FOR GBOTV STAGES
  - MONITOR STOWED GBOTV STAGES
  - PROVIDE STOWAGE FOR PARTIALLY DISASSEMBLED GBOTVs (AWAITING EARTH RETURN)

The prelaunch processing functional requirements for the GBOTV are the same as for the SBOTV with the exception of whether propellant resupply is performed.

GBOTV/SPACE STATION FUNCTION REQMNTS (CONT.)

- **PRELAUNCH PROCESSING**
  - REMOVE GBOTV FROM STOWAGE
  - INSTALL GBOTV IN CRADLES
  - PERFORM GBOTV CHECKOUT
  - TRANSLATE PAYLOAD TO INTEGRATION FACILITY
  - INSTALL PAYLOAD IN CRADLES
  - INTEGRATE PAYLOAD AND GBOTV
  - PERFORM PAYLOAD AND GBOTV CHECKOUT
  - RESUPPLY OMV PROPELLANT, IF NECESSARY
  - TRANSLATE OMV TO INTEGRATION FACILITY
  - PERFORM OMV-PAYLOAD-GBOTV CHECKOUT
  - RESUPPLY GBOTV PROPELLANT (OPTIONAL)

Launch processing and retrieval functional requirements are the same for the Ground-Based and Space-Based OTVs. Postmission processing differs only in the area of detanking. If there is no propellant tank farm on Space Station the excess GBOTV propellant will have to be jettisoned prior to OMV rendezvous.

GBOTV/SPACE STATION FUNCTIONAL REQMTS(CONT.)

- **LAUNCH PROCESSING**
  - TRANSLATE OMV/GBOTV/PAYLOAD STACK TO DEPLOYMENT PORCH
  - ENGAGE CRADLE-TO-OMV DEPLOYMENT LATCHES
  - DEPLOY VEHICLE STACK
- **RETRIEVAL**
  - RETRIEVE OMV/GBOTV/PAYLOAD STACK
  - PLACE VEHICLE STACK IN CRADLES
- **POSTMISSION PROCESSING**
  - DETANK GBOTV (***OPTIONAL***)
  - DEMATE OMV FROM GBOTV
  - TRANSLATE OMV TO OMV PROCESSING FACILITY
  - DEMATE PAYLOAD FROM GBOTV
  - TRANSLATE PAYLOAD TO PAYLOAD PROCESSING FACILITY

GBOTV postmission disassembly involves the removal of subsystems necessary to allow the GBOTV to fit within the Shuttle Cargo Bay. Logistics support provides for the manifesting and translation of GBOTV subsystems aboard Shuttle flights for Earth return, and for resupply of the optional propellant tank farm.

GBOTV/SPACE STATION FUNCTIONAL REQMTS (CONT)

- **POSTMISSION DISASSEMBLY**
  - REMOVE AEROBRAKE
  - DISASSEMBLE AEROBRAKE AND STOW
  - REMOVE LO_2 AND LH_2 TANKS AND STOW
  - STOW CORE STRUCTURE WITH ENGINES AND AVIONICS ATTACHED
- **LOGISTICS SUPPORT**
  - TRANSLATE PARTIALLY DISASSEMBLED GBOTV FROM STOWAGE TO SHUTTLE BAY
  - RESUPPLY PROPELLANT TANK FARM (***OPTIONAL***)

4.6 GROUND-BASED OTV/SPACE STATION FUNCTIONAL REQUIREMENTS - AEROBRAKE DEMATING

The concept for Ground-Based OTV aerobrake demating uses a robotic arm and cable latch release mechanism, just as with the Space-Based OTV.

GBOTV AEROBRAKE DEMATING

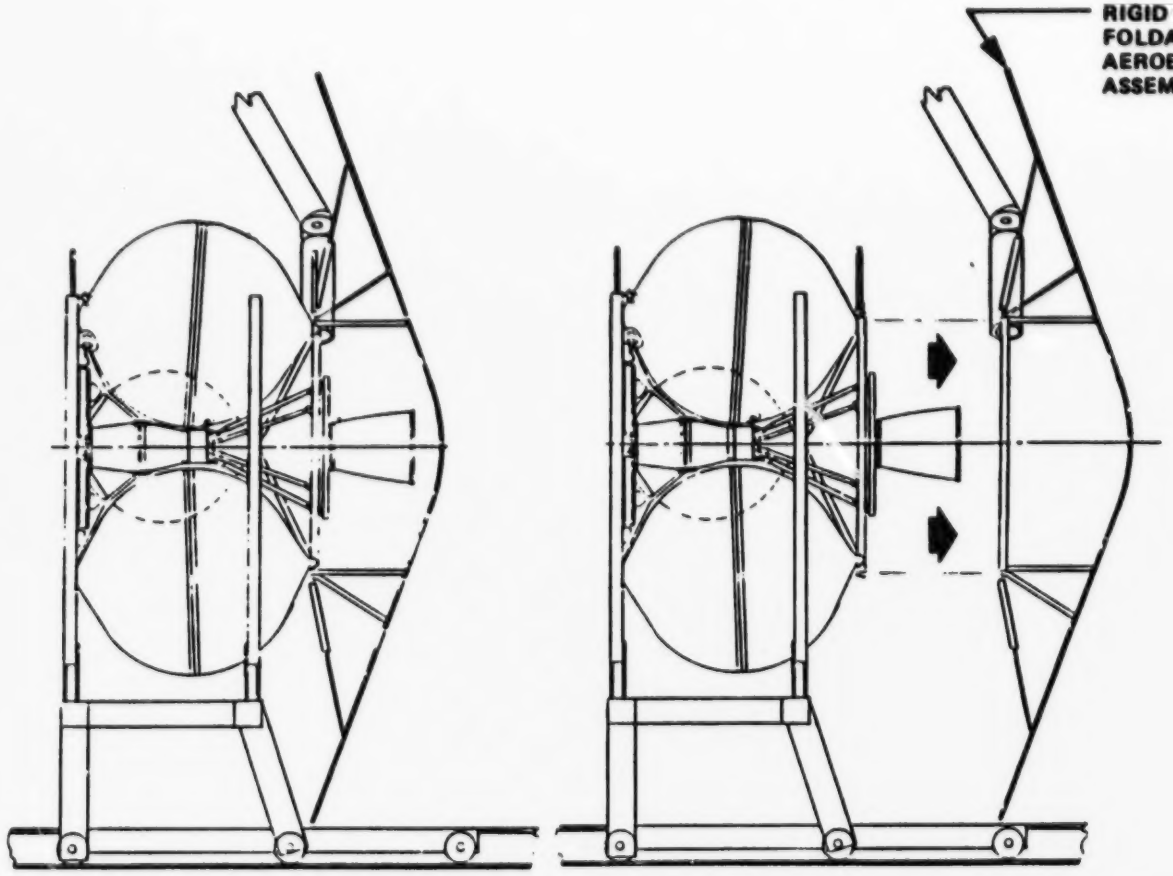

MARTIN MARIETTA

4.6 GROUND-BASED OTV/SPACE STATION FUNCTIONAL REQUIREMENTS - DISASSEMBLY

Removal of the Ground-Based OTV main propellant tanks is also accomplished in the same manner as with the Space-Based OTV.

GBOTV DISASSEMBLY

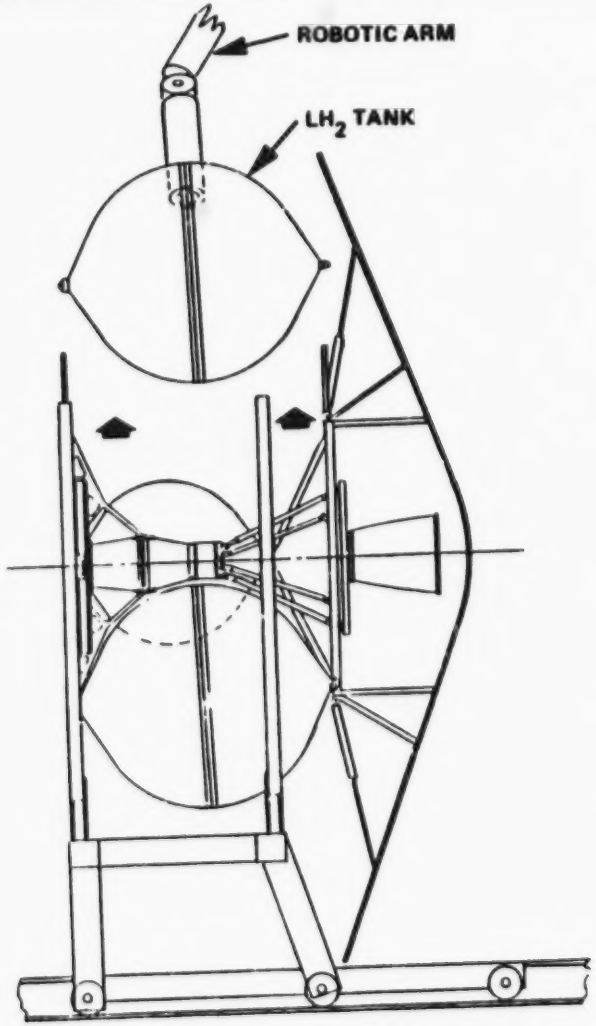

MARTIN MARIETTA

4.7 GROUND-BASED OTV/SPACE STATION ACCOMMODATION REQUIREMENTS

The following two charts identify the tasks required to process the GBOTV system and the Space Station accommodations needed to support these tasks. To aid the reader in comparing accommodation requirements between the Space-Based and Ground-Based OTVs, the same terminology was used for these charts as for the Space-Based OTV/Space Station Accommodation Requirements charts.

GBOTV/SS ACCOMMODATION REQUIREMENTS

	PRE & POSTMISSION PROCESSING																				
	BERTH				ROBOTICS					TOOLS		STORAGE				STRUCTURE			SERVICE		
	DTV CRADLE NUMBER 1	DTV CRADLE NUMBER 2	DTV CRADLE NUMBER 3	PAYLOAD CRADLES	CCTV	ROBOTIC ARM NUMBER 1 MANUAL	ROBOTIC ARM NUMBER 2 MANUAL	MRMS	SPACE CRANE	AEROBRAKE REMOVAL/DISASSEMBLY	DTV END EFFECTORS	AEROBRAKE FIXTURE	LO2 TANK FIXTURE	LH2 TANK FIXTURE	CORE STRUCTURE FIXTURE	BERTHING TRUSSES	STORAGE TRUSSES	ROBOTIC TRUSSES	POWER UMBILICAL LINES	SIGNAL UMBILICAL LINES	PROP/PRESS UMBIL CONN. (OPT.)
DELIVERY	X	X	X		X	X	X	X	X							X	X	X			
CHECKOUT	X	X	X		X	X	X									X	X	X	X	X	
STORAGE	X	X	X		X				X			X	X	X	X	X	X	X	X	X	
PRELAUNCH	X	X	X	X	X	X	X	X	X							X	X	X	X	X	X
LAUNCH	X	X	X	X	X				X							X	X	X	X	X	
RETRIEVAL	X	X	X	X	X	X	X	X	X							X	X	X			
POSTMISSION	X	X	X	X	X	X	X	X	X							X	X	X	X	X	X
DISASSEMBLY	X	X	X		X	X	X	X		X	X	X	X	X	X	X	X	X			
LOGISTICS					X	X	X	X	X		X										

ORIGINAL PAGE IS
OF POOR QUALITY

MARTIN MARIETTA

GBOTV/SS ACCOMMODATIONS REQUIREMENTS (CONT.)

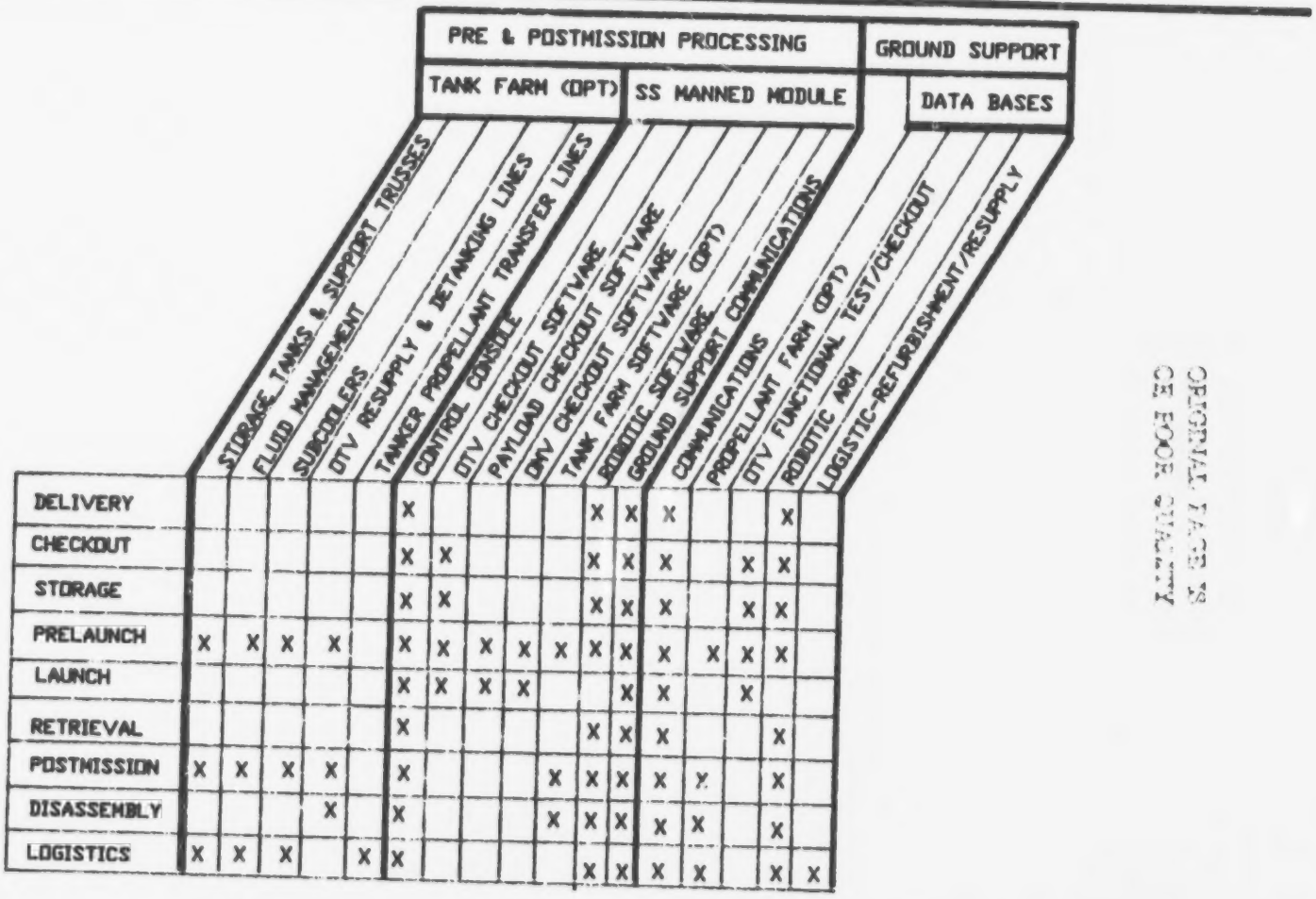

	PRE & POSTMISSION PROCESSING																	GROUND SUPPORT	
	TANK FARM (OPT)					SS MANNED MODULE												DATA BASES	
	STORAGE TANKS & SUPPORT TRUSSES	FLUID MANAGEMENT	SUBCOOLERS	OTV RESUPPLY & DETANKING LINES	TANKER PROPELLANT TRANSFER LINES	CONTROL CONSOLE	OTV CHECKOUT SOFTWARE	PAYLOAD CHECKOUT SOFTWARE	DMV CHECKOUT SOFTWARE	TANK FARM SOFTWARE	ROBOTIC SOFTWARE	GROUND SOFTWARE	GROUND SUPPORT COMMUNICATIONS	COMMUNICATIONS	PROPELLANT FARM (OPT)	OTV FUNCTIONAL TEST/CHECKOUT	ROBOTIC ARM	LOGISTIC-REFURBISHMENT/RESUPPLY
DELIVERY						X					X	X	X			X		
CHECKOUT						X	X				X	X	X		X	X		
STORAGE						X	X				X	X	X		X	X		
PRELAUNCH	X	X	X	X		X	X	X	X	X	X	X	X	X	X	X		
LAUNCH						X	X	X	X			X	X		X			
RETRIEVAL						X					X	X	X			X		
POSTMISSION	X	X	X	X		X				X	X	X	X	X		X		
DISASSEMBLY				X		X				X	X	X	X	X		X		
LOGISTICS	X	X	X		X	X					X	X	X	X		X	X	

MARTIN MARIETTA

PRECEDING PAGE BLANK NOT FILMED

ORIGINAL PAGE IS
OF POOR QUALITY

4.8 GROUND BASED OTV PRE- AND POSTMISSION PROCESSING TIMELINES - NOMINAL MISSION MODEL REV. 8

Pre- and postmission processing times for a GBOTV operating in conjunction with Space Station are shown in the following graphs. In addition, assembly of a propellant tank farm (PTF) (optional) and berthing accommodations was incorporated in the two years preceding initial GBOTV operations.

PTF construction will require the expenditure of approximately 50 man hours, while berthing accommodations would require approximately 150 man hours to complete. It is envisioned that both facilities could be modified and expanded to meet SBOTV accommodation requirements.

The large increase in processing time during the years 2008 through 2010 is due to the increased requirement to process the three 54K GBOTV stages needed for the 80K lunar Delivery Missions of the nominal mission model.

GBOTV PRE & POSTMISSION PROCESSING

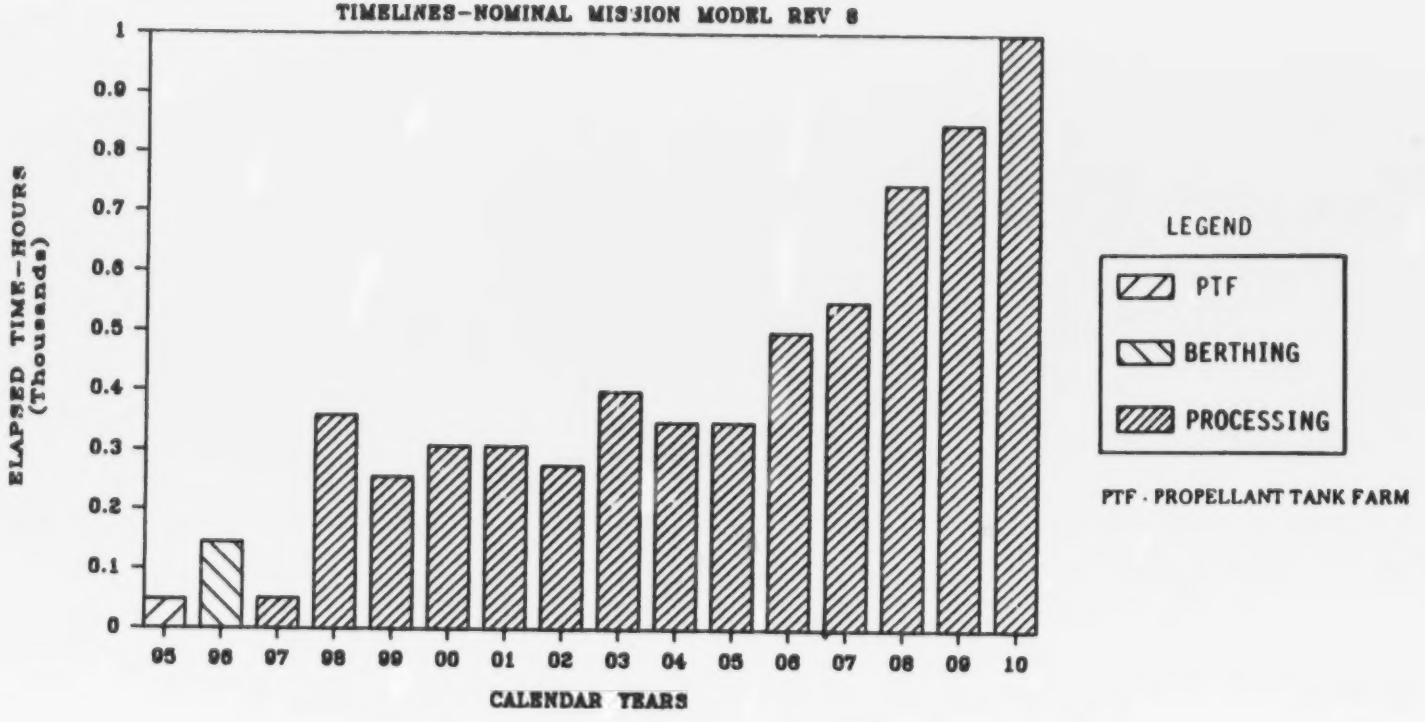

MARTIN MARIETTA

4.8 GROUND-BASED OTV PRE- AND POST MISSION PROCESSING TIMELINES - LOW MISSION MODEL REV. 8

Pre- and postmission processing man-hours for the Ground-Based OTV operating in conjunction with Space Station will decrease approximately 60% if the low mission model is adopted.

GBOTV PRE- & POSTMISSION PROCESSING

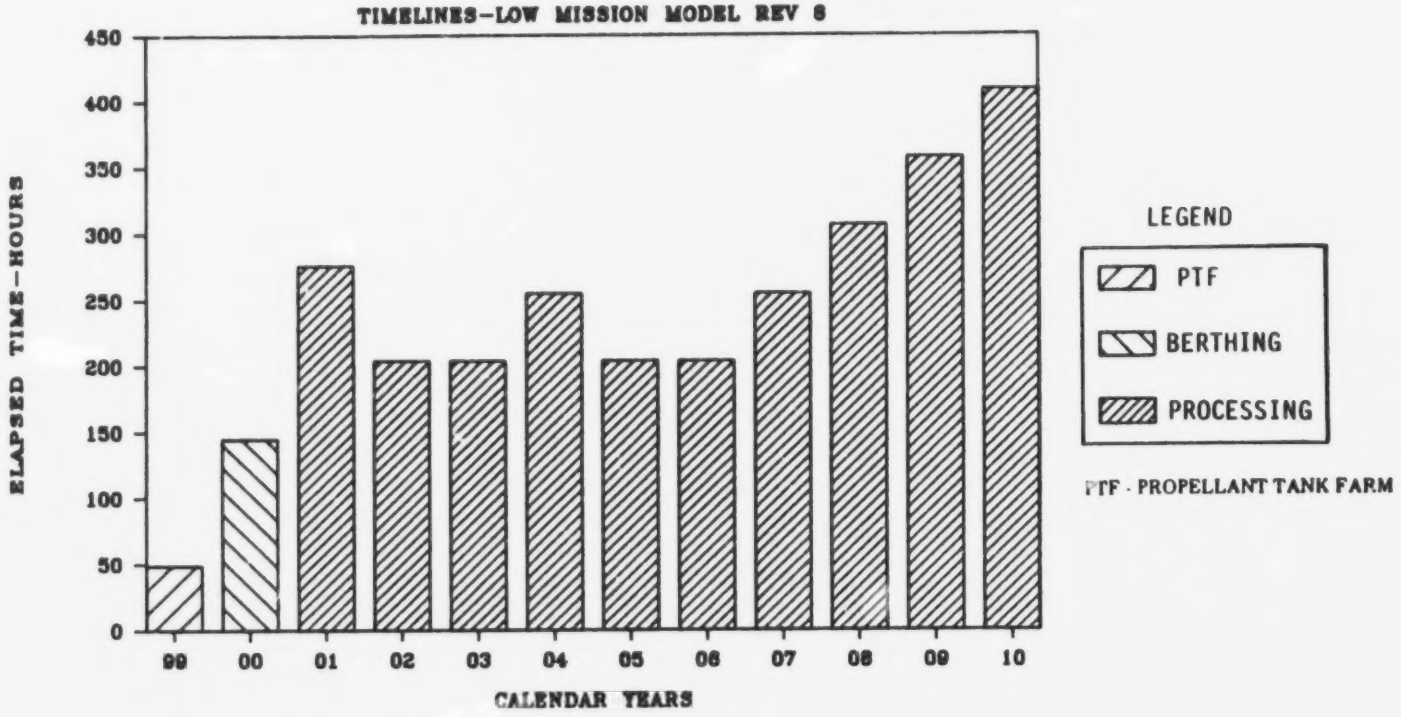

MARTIN MARIETTA

4.9 GROUND-BASED OTV ACCOMMODATIONS DESIGN AND OPTIMIZATION

The accommodation designs for the Ground-Based OTV operating at Space Station are almost exactly the same as for the Space-Based OTV, and therefore will not be reshown. Berthing cradle carriages and translation rails are needed. If indeed payloads require thermal protection during checkout while mated with the OTV, then a hangar shell is also required. If a propellant tank farm is to be placed at Space Station, then the previous referenced design suffices. The only real exception is the robotic arm, where manual control, rather than automation, is deemed appropriate.

GBOTV ACCOMMODATIONS DESIGN & OPTIMIZATION

- **ELEMENTS**

  - BERTHING CRADLE CARRIAGES AND TRANSLATION RAILS
  - PAYLOAD CRADLE CARRIAGE
  - PROPELLANT TANK FARM (***OPTIONAL***)
  - FLUID/POWER/SIGNAL UMBILICALS
  - TEST/CHECKOUT SYSTEM
  - SPACE CRANE
  - ROBOTIC ARM
    - MANUALLY CONTROLLED (***NO AUTOMATION***)
  - CCTV SYSTEM

4.10 GROUND BASED OTV FLEET ACCOMMODATION ADDITIONS

Since the GBOTV is returned to Earth after its mission, storage facilities will be reqluired to both store a stage awaiting a mission and disassembled portions of stages awaiting return. Recognize that the equivalent of two Shuttle flights are required to return the GBOTV to earth. For each 80K Lunar Delivery Mission, this equates to five Shuttle delivery flights (three for GBOTV stages and two for payload), and seven Shuttle return flights (six for GBOTV stages and one for manned capsule).

GBOTV FLEET ACCOMMODATION ADDITIONS

- **ASSEMBLY STORAGE FACILITIES**
  - FULLY ASSEMBLED OTV STAGE
    - POWER/SIGNAL UMBILICALS
- **DISASSEMBLY STORAGE FACILITIES**
  - OTV CORE STRUCTURE WITH AVIONICS
    - POWER UMBILICAL (MODULE HEATERS)
  - LH_2 TANK STORAGE (2 PER STAGE)
  - LO_2 TANK STORAGE (2 PER STAGE)
  - DISASSEMBLED AEROBRAKE

4.11 GROUND-BASED OTV ACCOMMODATION TECHNOLOGY REQUIREMENTS

The Ground-Based OTV accommodation technology requirements are the same as for the SBOTV, with the obvious exclusion of automation and robotic development, and nondestructure inspection sensors and system development. A propellant tank quick disconnect is required whether or not a propellant tank farm exists at Space Station so that the large tanks can be removed for Earth return. In the same sense, the ACS thruster system requires a quick disconnect for the feed lines so that the aerobrake can be removed.

GBOTV ACCOMMODATIONS - TECHNOLOGY REQMTS

- **MATERIALS FOR TRANSLATION MECHANISMS**
  - CRADLE CARRIAGE
  - SPACE CRANE
  - ROBOTIC ARM
- **POST-MISSION DISASSEMBLY**
  - PROPELLANT TANK QUICK DISCONNECT
  - RCS THRUSTER QUICK DISCONNECT
- **PROPELLANT TRANSFER AND STORAGE (*OPTIONAL*)**
  - CRYOGENIC FLUID QUICK DISCONNECT
  - ZERO-G LIQUID TRANSFER AND GAUGING
  - VANE/CHANNEL ACQUISITION TANKS

4.12 RECOMMENDED GROUND-BASED OTV DESIGN CHANGES

As one might expect since the accommodation requirements are very similar, the recommended GBOTV design changes closely parallel those of the SBOTV.

RECOMMENDED GBOTV DESIGN CHANGES

- **PAYLOAD INTERFACE MECHANISM**
  - PAYLOAD
  - GBOTV SECOND STAGE (NOMINAL MODEL ONLY)
  - GBOTV THIRD STAGE (NOMINAL MODEL ONLY)
  - OMV (GEO SERVICING)
- **AEROBRAKE OMV INTERFACE**
- **AEROBRAKE INTERFACE RING**
  - MOVE MAIN ENGINES AFT
- **AEROBRAKE MOUNTING RING**
- **CRADLE AND CRANE INTERFACES**
  - CRADLE INTERFACES (4) ON LO_2 TANK STRUTS
  - CRANE INTERFACES (2) ON LH_2 TANK STRUTS
- **CRYOGENIC FLUID QUICK DISCONNECT**
  - LH_2 AND LO_2 TANKS
  - RCS THRUSTERS (AT AEROBRAKE RING INTERFACE)

4.12 RECOMMENDED GROUND-BASED OTV DESIGN CHANGES - RESULTANT DESIGN CONFIGURATION

The facing page chart shows the resultant Ground-Based OTV design configuration as placed within the General Purpose Aft Cargo Carrier so as to allow sufficient space for a foldable/deployable 44 ft aerobrake.

RESULTANT GBOTV DESIGN CONFIGURATION

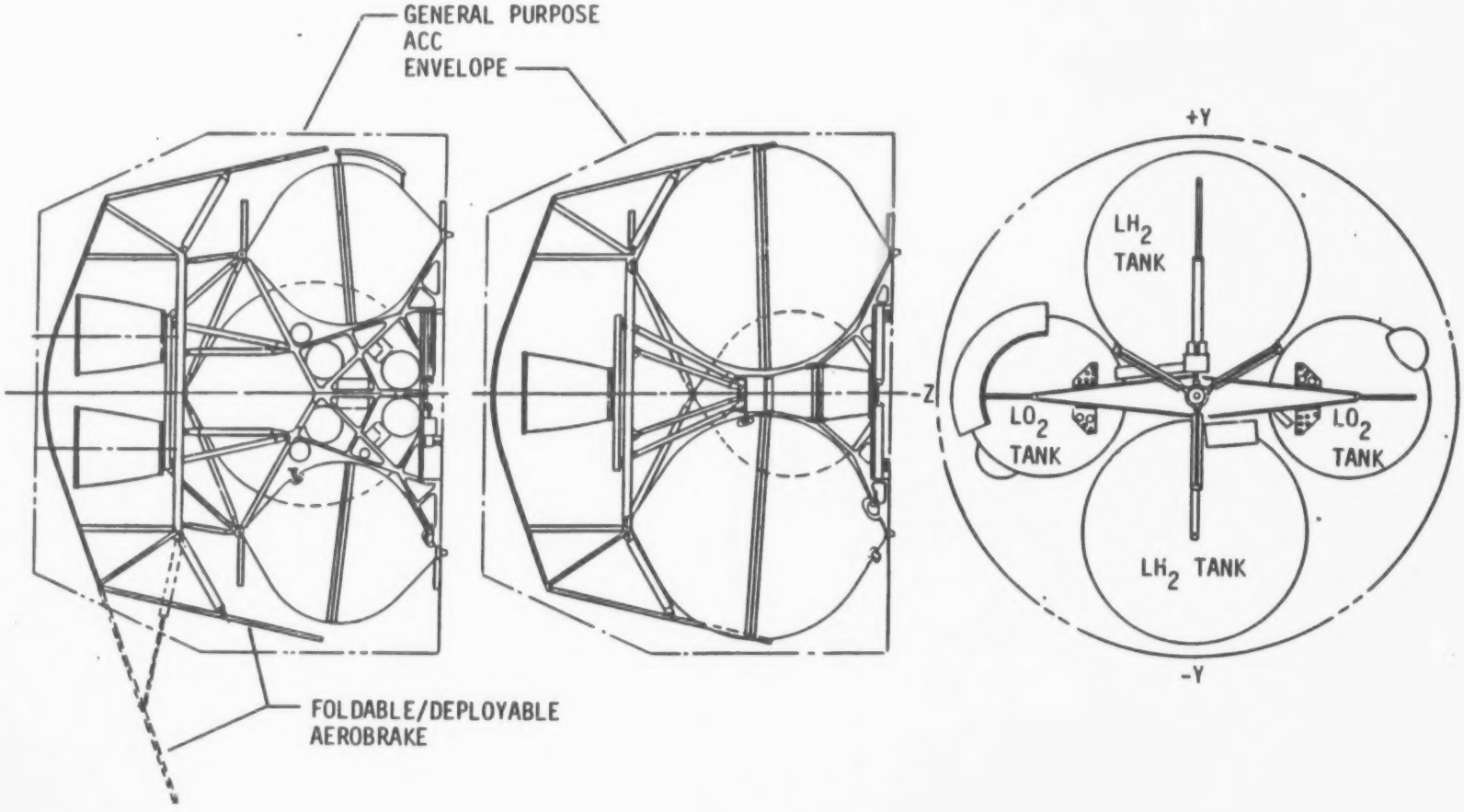

MARTIN MARIETTA

PRECEDING PAGE BLANK NOT FILMED

5.0 OTV ACCOMMODATIONS ASSESSMENT

5.1 OTV ACCOMMODATIONS ASSESSMENT OVERVIEW

Under Study Methodology, this effort is defined as Task 5.4. The facing page chart shows the sequence of steps taken, and the inputs to and outputs from this task. After each candidate OTV concept completed accommodations definition within Tasks 5.2.2 and 5.3, they were subjected to an analysis to determine and identify initial Space Station requirements. These requirements not only identified OTV accommodations needed at the onset of operations, to support a Ground-Based OTV for example, but also the early planning provisions that must be made to handle OTV operations to maturity.

Following initial Space Station requirements identification, a Potential Space Station Evolutionary Implementation Plan was prepared. This plan identifies the time phasing of accommodations, including those for the OTV fleet, and provides an element priority listing of those accommodations.

The initial Space Station requirements and the evolutionary implementation plan are provided to Task 6, for association with Task 7 cost data to allow option assessment, and to NASA for independent evaluation.

The remaining charts within this section provide the details for all the items listed.

TASK 5.4 OTV ACCOMMODATIONS ASSESSMENT

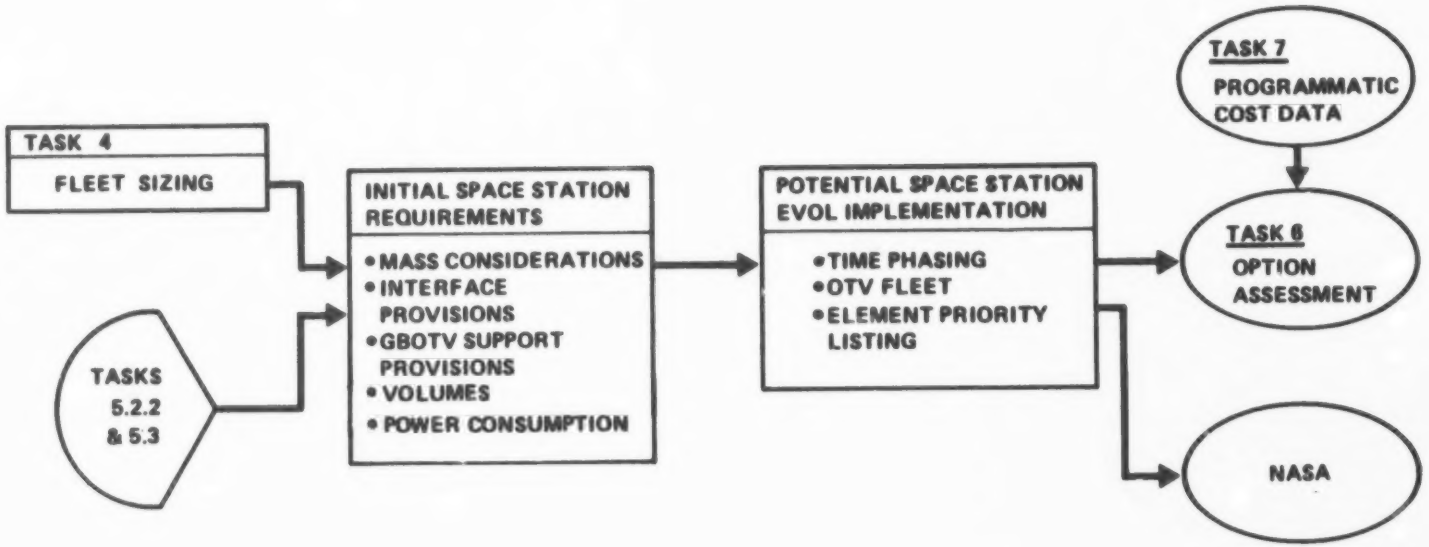

MARTIN MARIETTA

5.2 INITIAL SPACE STATION REQUIREMENTS

After consideration of the various Space-Based and Ground-Based OTV accommodations requirements, we shall translate those requirements to initial Space Station requirements in the sequence shown on the facing page chart.

INITIAL SPACE STATION REQUIREMENTS

- ELEMENTS
  - *MASS CONSIDERATIONS*
  - *HANGAR SCAR*
  - *PROPELLANT TANK FARM*
  - *SPACE CRANE PROVISIONS*
  - *INTERFACE PROVISIONS*
  - *POWER CONSUMPTION REQUIREMENTS*
  - *VOLUMETRIC REQUIREMENTS*

5.2.1 MASS CONSIDERATIONS

The mass impact of the various accommodation elements, along with the total mass impact of less than or equal to 37GK lbm, is shown on the facing page chart. Mass loss at launch, as well as mass gain at retrieval and propellant tank farm resupply is also shown. These data are provided to the Space Station Program so that they may determine the dynamic, structural, and operational effects.

MASS CONSIDERATIONS

- PROPELLANT TANK FARM $\leq$ *225K LBM*
- SERVICING AND MAINTENANCE HANGAR $\leq$ *55K LBM*
- STORAGE OPTIONS
  - STORAGE HANGAR $\leq$ *25K LBM*
  - DUPLICATE MAINTENANCE HANGAR $\leq$ *55K LBM*
- OTV STAGES AND ORU SPARES $\leq$ *35K LBM*
- TOTAL SPACE STATION MASS IMPACT $\leq$ *370K LBM*
- MASS LOSS AT LAUNCH
  - $\leq$ *300K LBM* (TWO STAGE LUNAR MISSION)
  - $\geq$ *70K LBM* (MINIMUM PAYLOAD MISSION)
- MASS GAIN AT RETRIEVAL
  - $\leq$ *35K LBM*
- MASS GAIN AT PTF RESUPPLY
  - $\leq$ *180K LBM*

5.2.2 HANGAR SCAR - HANGAR/BERTHING RAILS & PROPELLANT FARM ATTACHMENT CONSIDERATIONS

A concept for subsequently attaching the hangar (SBOTV) or berthing rails (GBOTV) and the propellant tank farm to the already assembled IOC Space Station is shown. This concept utilizes a marmon clamp-type fixture. The Space Station program will have to determine if this type of fixture is capable of withstanding all the torques and moments envisioned. If not, then some sort of attachment arrangement will have to be designed into the IOC Space Station.

HANGAR/BERTHING RAILS & PROPELLANT FARM ATTACHMENT CONSIDERATIONS

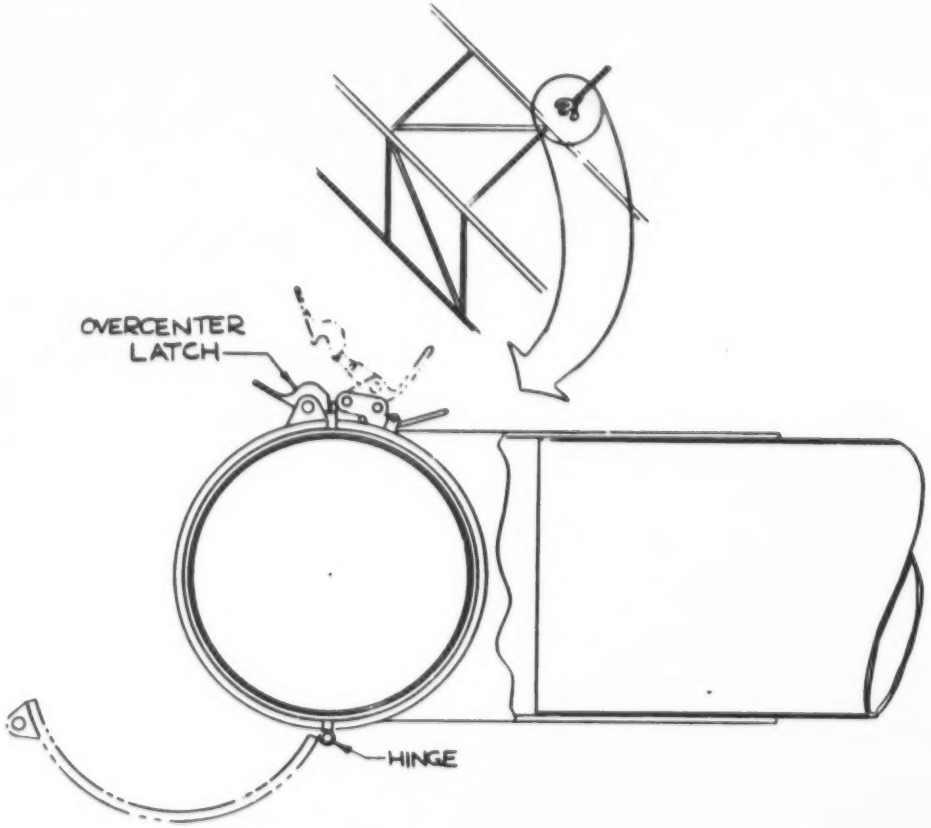

MARTIN MARIETTA

5.2.3 PROPELLANT TANK FARM

If the Space Station plans to use cryogens for reboost and/or attitude control, then the IOC Space Station requires a cryogenic propellant tank farm. And in fact, scavenged propellant should be collected at the earliest opportunity so as to begin to fill the tanks. If Space Station does not elect to use cryogens for reboost/attitude control, then provision should be made in the IOC Space Station for the addition of the power, signal, and fluid interfaces at a later time.

PROPELLANT TANK FARM

- *IF*
  - SPACE STATION USES CRYOGENS FOR REBOOST/ATTITUDE CONTROL
  - PROPELLANT SCAVENGING USED FOR RESUPPLY

- *THEN*
  - INITIAL SPACE STATION REQUIRES CRYOGENIC PROPELLANT TANK FARM
    - TANK FARM SIZE DETERMINED BY REBOOST/ATTITUDE CONTROL REQUIREMENTS AND NUMBER OF SCAVENGABLE FLIGHTS

- *IF NOT*
  - *IOC SPACE SATION SCARS REQUIRED FOR FUTURE PROPELLANT TANK FARM*

5.2.4 SPACE CRANE PROVISIONS

It is obvious from the scenarios previously presented that the MRMS and the space crane must work in conjunction. The purpose of this chart is to identify that provision must be made in the IOC Space Station design to allow this activity.

SPACE CRANE PROVISIONS

- **SPACE CRANE AND MRMS MUST WORK IN CONJUNCTION**
  - ***TRANSFER OF ARTICLES FROM SHUTTLE-SPACE STATION STORAGE TO OTV HANGAR AND VICE VERSA***
    - OTV CORE STRUCTURE
    - MAIN PROPELLANT TANKS
    - FOLDED AEROBRAKE
    - ORU SPARES
    - CRADLE CARRIAGES
    - ROBOTIC ARMS
    - PAYLOADS
    - OMV
- ***INITIAL SPACE STATION DESIGN MUST CONSIDER***
  - TRANSFER LOCATIONS
  - ARM LENGTHS
  - SWEPT VOLUMES
  - MASSES AND INERTIAS

5.2.5 INTERFACE PROVISIONS - HANGAR INTERFACE PROVISIONS

The IOC Space Station design should make provision for adding the hangar servicing interfaces as identified.

HANGAR INTERFACE PROVISIONS

HANGAR EQUIPMENT ITEM	POWER SERVICE INTERFACE	SIGNAL SERVICE INTERFACE	VIDEO SERVICE INTERFACE
+ V DOOR	X	X	
- V DOOR	X	X	
OTV CRADLE #1	X	X	
OTV CRADLE #2	X	X	
PROPELLANT UMBILICALS	X	X	
OMV UMBILICALS	X	X	
PAYLOAD CRADLE	X	X	
SPACE CRANE	X	X	X
MANIPULATOR ARMS	X	X	X
CCTV SYSTEM	X	X	X

5.2.5 INTERFACE PROVISIONS - VEHICLE INTERFACE PROVISIONS

The IOC Space Station design should make provision for adding the vehicle servicing interfaces identified.

VEHICLE INTERFACE PROVISIONS

SERVICE INTERFACES	OTV SINGLE/FIRST STAGE	OTV SECOND STAGE	OMV	PAYLOAD	MANNED CAPSULE
POWER	X	X	X	X	X
SIGNAL	X	X	X	X	X
LH2	X	X			
LO2	X	X			
N204			OPTIONAL	OPTIONAL	OPTIONAL
MMH			OPTIONAL	OPTIONAL	OPTIONAL
H2O					X
OXYGEN					X
NITROGEN					X
HEATING					X
COOLING					X

5.2.6 POWER CONSUMPTION REQUIREMENTS - SPACE-BASED OTV TANK FARM POWER CONSUMPTION - ANNUAL

The total tank farm power consumption levels necessary to support SBOTV operations increases by a minimal amount from IOC through the mature years of the program. The data used to develop the power consumption levels for each year of the program were based upon the following: Analysis of projected propellant tank farm functional requirements; cryogenic tank farm power requirements; and the OTV Nominal Mission Model, Revision 8. These sources formed the basis for the development of the power consumption levels required to support tank farm resupply, OTV loading and detanking, and standby operations.

Initial data indicates that resupply, loading, and detanking operations will have minimal impact on he yearly power requirements even when OTV missions are increased. The driving factor is the small amount of power, approximately 2.4KW per day, to compress and store the projected tank farm boiloff. However, to ensure adequate power for all tank farm operations, a more definitive model should be developed to further baseline average and peak power consumption requirements. The power requirements necessary to support SBOTV operations should be an integral part of any further OTV study plans.

SBOTV TANK FARM POWER CONSUMPTION

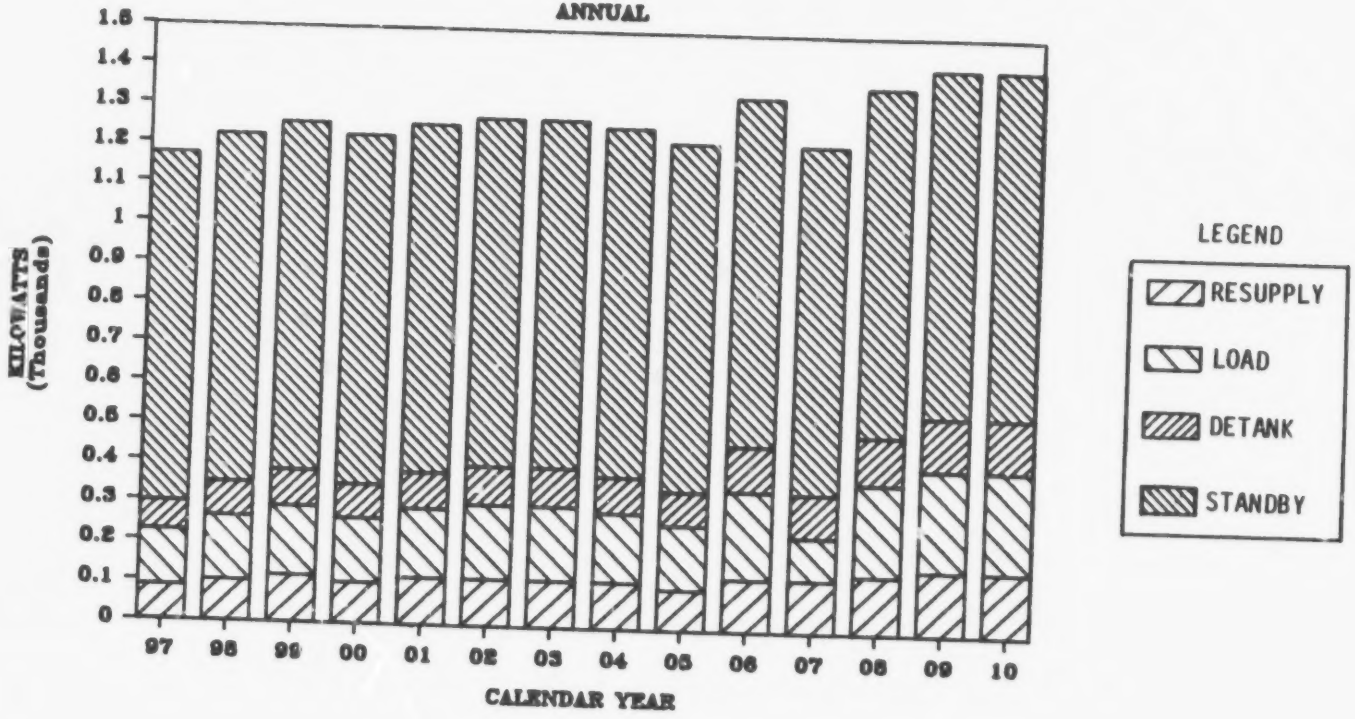

MARTIN MARIETTA

5.2.6 POWER CONSUMPTION REQUIREMENTS - CRYOGENIC TANK FARM POWER REQUIREMENTS

The facing page chart identifies the data used to determine the annual tank farm power requirements presented on the previous chart. The data was derived from the cryogenic propellant tank farm definition contained in Section 8.0, Trade Studies and Analyses, of this volume.

CRYOGENIC TANK FARM POWER REQUIREMENTS

SYSTEM	POWER REQUIRED (KW)	COMMENTS
COMPRESSOR TO STORE BOILOFF STEADY STATE	0.26	2 LOW PRESSURE COMPRESSORS @ TVS, 1 HIGH PRESSURE COMPRESSOR @ GAS STORAGE AREA, SIZED FOR 1.0 LB/HR MAXIMUM FLOW, .3 LB/HR NOMINAL
CHILLDOWN - OTV FILL	9.1	3 HR CHILLDOWN 500° R, 3 IN LINES, 824 LBM TOTAL MASS, COMPRESS AND STORE 125 LB GH2 AND GO2
CHILLDOWN - FACILITY FILL	13.0	2 HOUR CHILLDOWN 500° R, 3 IN LINES, 1212 LBM TOTAL MASS, COMPRESS AND STORE 182 LB GH2 AND GO2
CIRCULATE PRESSURANT	1.4	COMPRESS SUBCOOLER OUTFLOW TO PRESSURIZE SUPPLY TANK FOR 55K LBM, 4 HR TRANSFER
MISCELLANEOUS	1.5	VALVES, INSTRUMENTS, MARGIN
PEAK POWER EXPECTED	***14.5***	CHILLDOWN AND MISCELLANEOUS

5.2.6 POWER CONSUMPTION REQUIREMENTS - SPACE-BASED OTV HANGAR POWER CONSUMPTION - ANNUAL

The determination of specific hangar power consumption levels proved to be a real challenge. Although the specific functional requirements and timelines were available, the specific models for the robotic arms, berthing/mating cradles, and space crane were not. We, therefore, scaled the robotic arms and space crane to the shuttle RMS to derive the power consumption needed to accomplish a particular functional operation in the processing cycle. Consumption requirements for the mating/berthing cradles were developed by scaling each cradle to the maximum anticipated mass requirements for each. In addition, appropriate gear ratios were assumed so that servicing, maintenance, and deployment operations could be accomplished with the same cradle.

Annual power consumption was derived from the OTV Nominal Mission Model, Revision 8, with an average processing time of 46 hours for each mission. Power requirements needed to support the additional stage processing for each lunar mission was also factored into the consumption figures.

The berthing and mating cradles proved to be by far the largest power consumers due to the larger masses that were displaced during deployment and retrieval operations. In addition, the capability to increase cradle velocity to the projected 2 ft/sec required for OTV/payload/OMV stack deployment from the Space Station consumed a significant amount of power.

A follow on study specifically addressing robotic arm, space crane, and cradle power requirements should be initiated to ensure sufficient power is available to support Space Station and OTV operations.

SBOTV HANGAR POWER CONSUMPTION

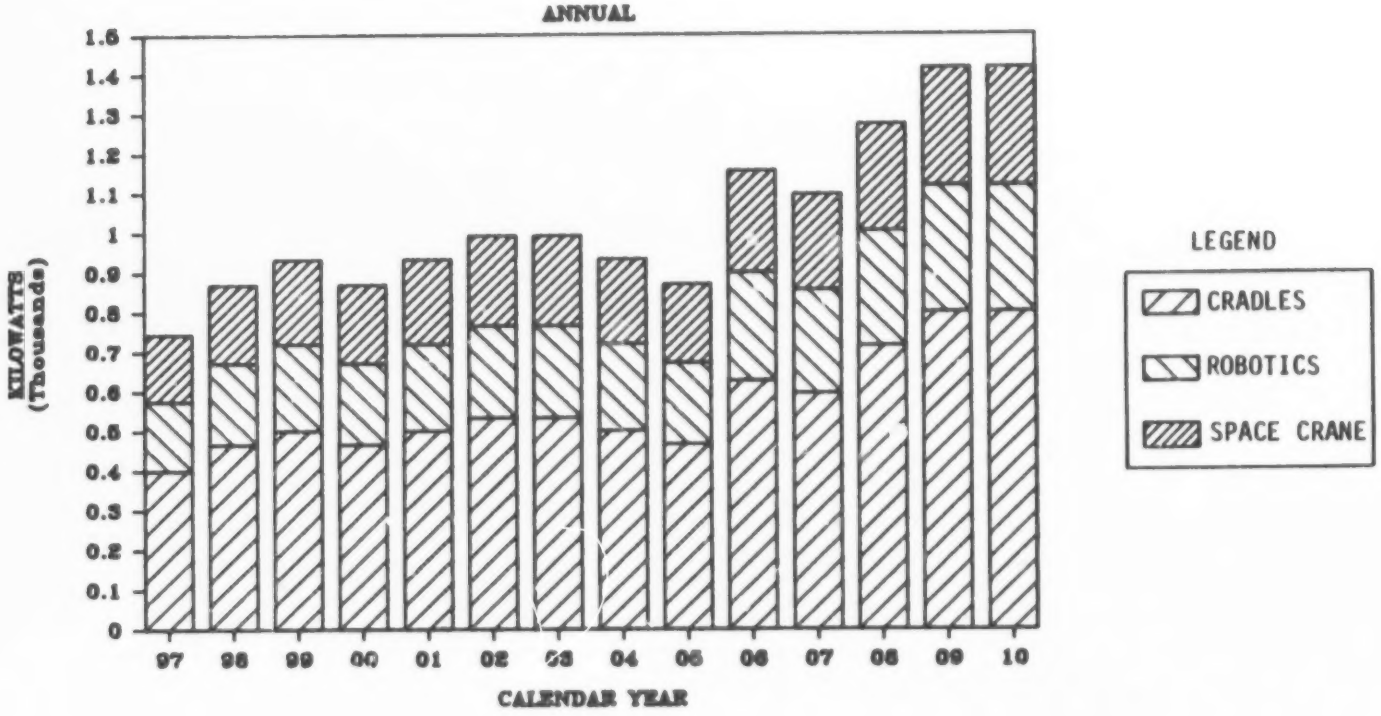

MARTIN MARIETTA

5.2.6 POWER CONSUMPTION REQUIREMENTS - AVERAGE DAILY POWER CONSUMPTION-SPACE-BASED OTV/SPACE STATION ACCOMMODATIONS

Our analysis indicates that, on the average, approximately 5.2 to 7.8 KW will be consumed to support OTV servicing, maintenance, deployment, and retrieval operations on a daily basis. This falls well within the power generation capabilities of the Space Station and should not adversely affect station design and operations even if consumption requirements are increased during follow-on studies.

AVERAGE DAILY POWER CONSUMPTION

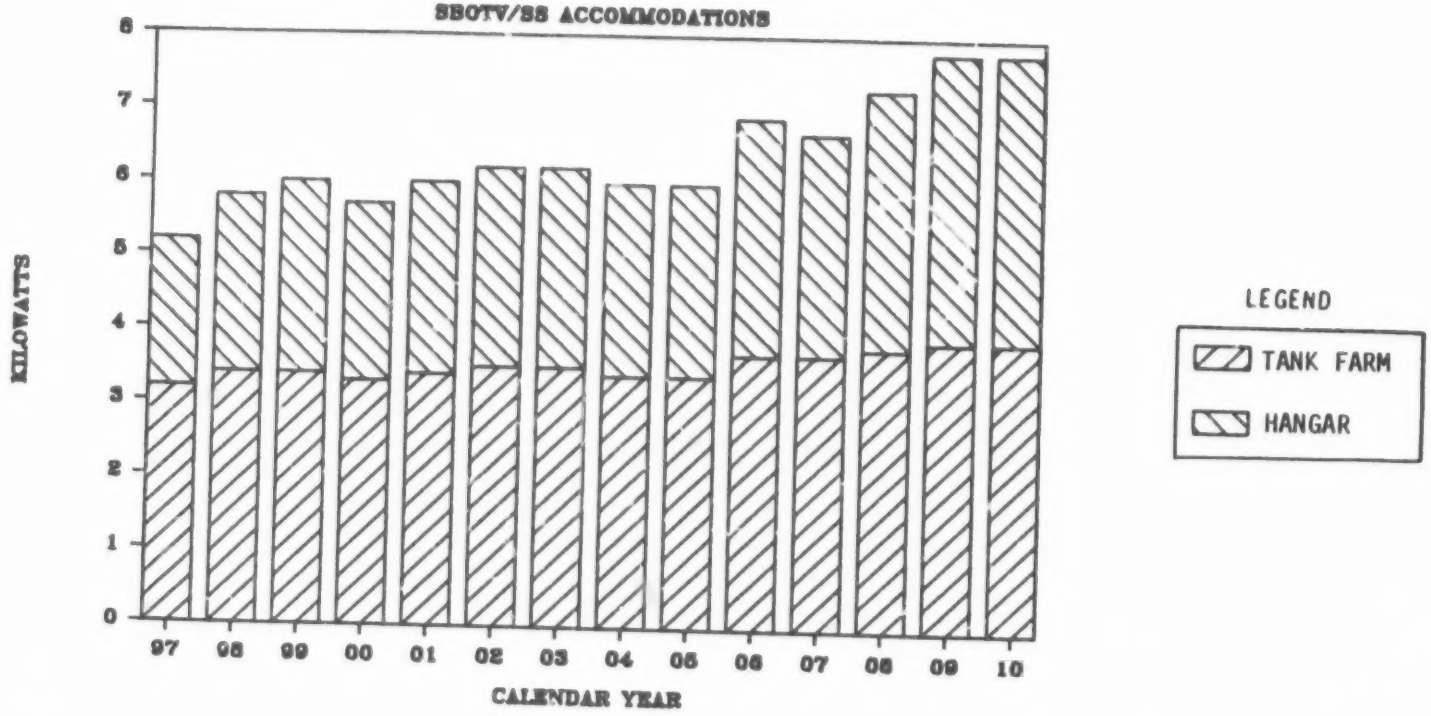

MARTIN MARIETTA

5.2.6 POWER CONSUMPTION REQUIREMENTS - SPACE-BASED OTV PEAK POWER CONSUMPTION BY PROCESSING FUNCTION

OTV retrieval operations is the single largest power consumer during the OTV processing cycle. This is primarily caused by the need to: perform space crane operations to capture and berth the returning OTV, payload, and OMV; translate the stack into the hangar; payload and OMV demating operations; and perform OTV detanking and safing operations.

The other processing functions will draw approximately equal quantities of power during peak periods. A more detailed study should be conducted to determine if these peak power requirements adversely impact Space Station operations or design.

SBOTV PEAK POWER CONSUMPTION

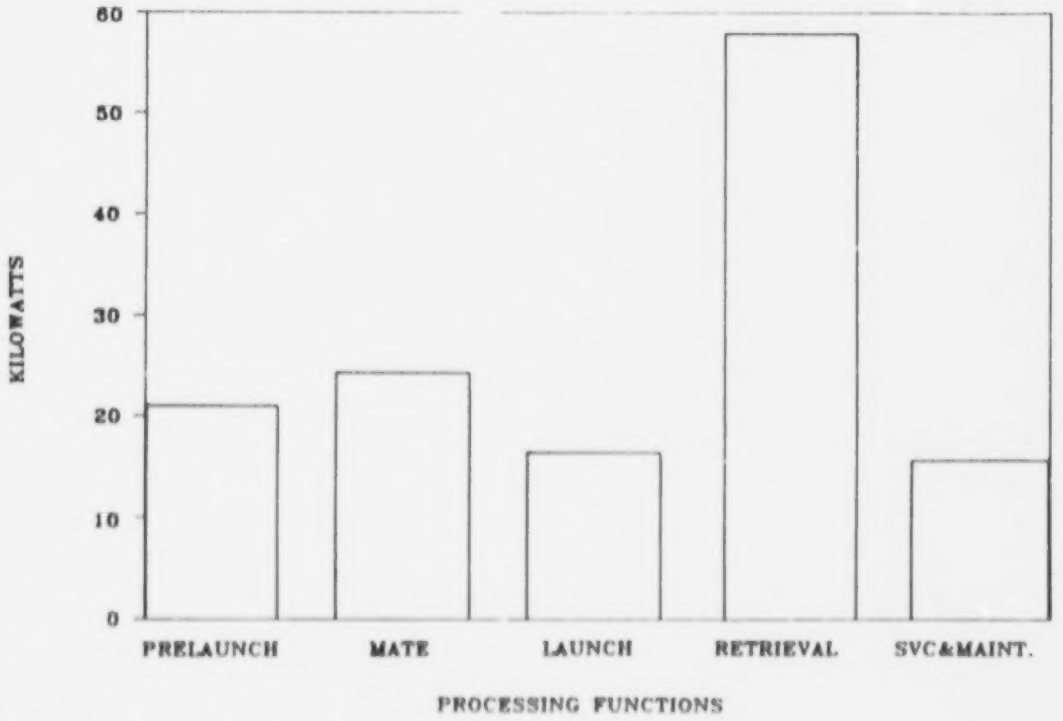

MARTIN MARIETTA

5.2.6 POWER CONSUMPTION REQUIREMENTS - GROUND-BASED OTV TANK FARM POWER CONSUMPTION - ANNUAL (OPTIONAL)

The GBOTV tank farm power consumption closely parallels the SBOTV tank farm consumption requirements. It was assumed that propellant loading would be required in some form following payload mating and prior to OTV launch from Space Station. However, the largest consumption requirement will be generated by the need to maintain the steady state condition during each program year.

GBOTV TANK FARM POWER CONSUMPTION

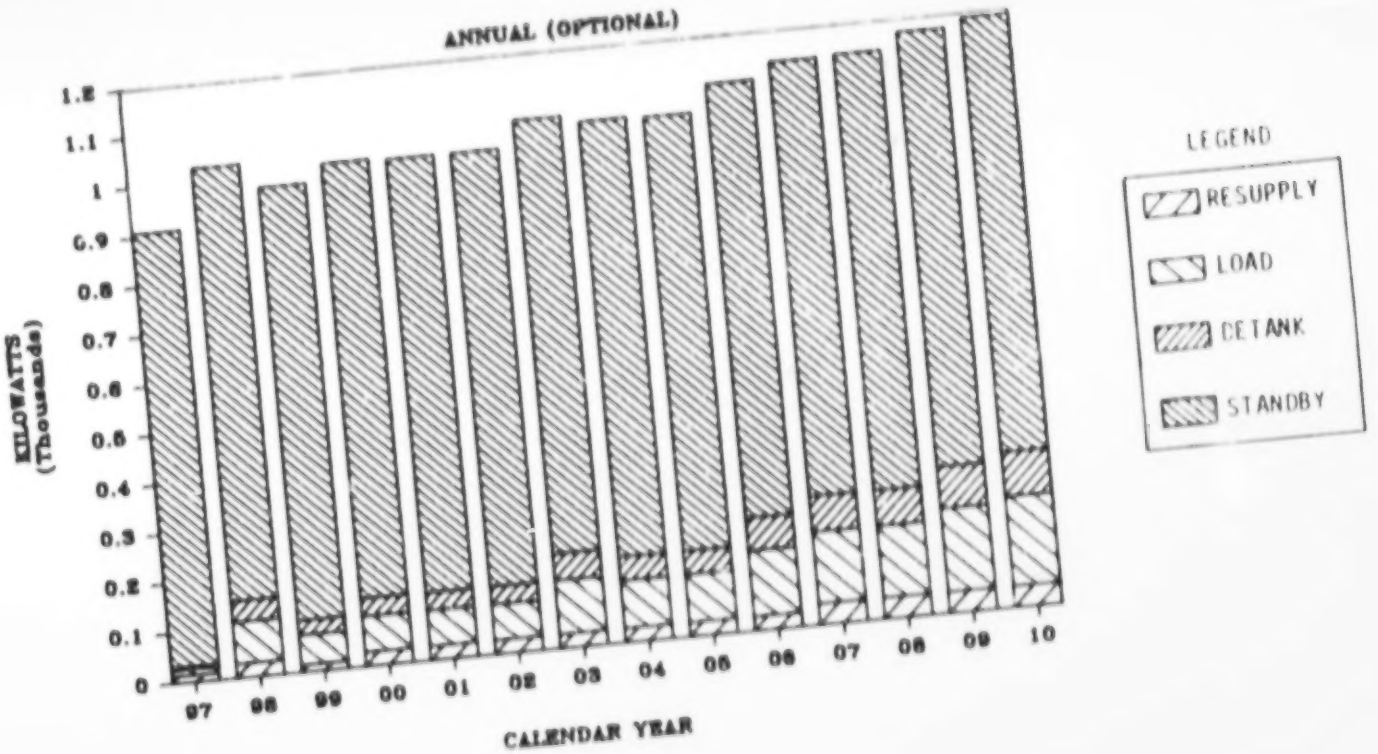

MARTIN MARIETTA

5.2.6 POWER CONSUMPTION REQUIREMENTS - GROUND-BASED OTV BERTHING POWER CONSUMPTION - ANNUAL

The reduction in the annual GBOTV berthing power consumption in comparison to the SBOTV hangar consumption is directly attributable to the number of OTVs that are processed during a particular year. It was assumed that only minor modifications would be necessary to accommodate the GBOTV system with the robotics, cradles, and space crane designed for the SBOTV system.

GBOTV BERTHING POWER CONSUMPTION

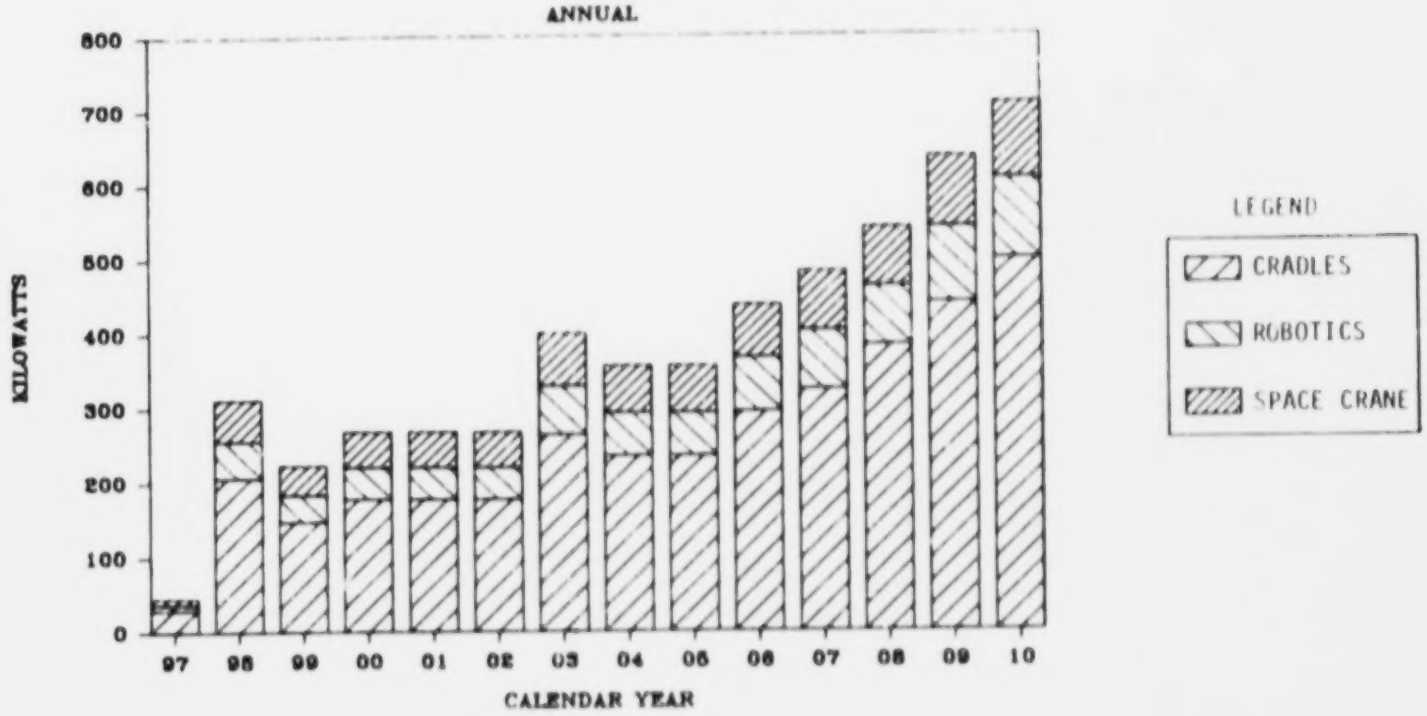

MARTIN MARIETTA

5.2.6 POWER CONSUMPTION REQUIREMENTS - AVERAGE DAILY POWER CONSUMPTION-GROUND-BASED OTV/SPACE STATION ACCOMMODATIONS

The average daily consumption rates are moderately lower than those necessary to support the SBOTV system. However, neither system will create a major drain on the power generation capabilities of Space Station. The use of a berthing facility versus a hangar facility does not provide an appreciable decrease in power consumption, since the primary cause for any reduction is directly related to changes in processing requirements and not structures or mechanisms.

AVERAGE DAILY POWER CONSUMPTION

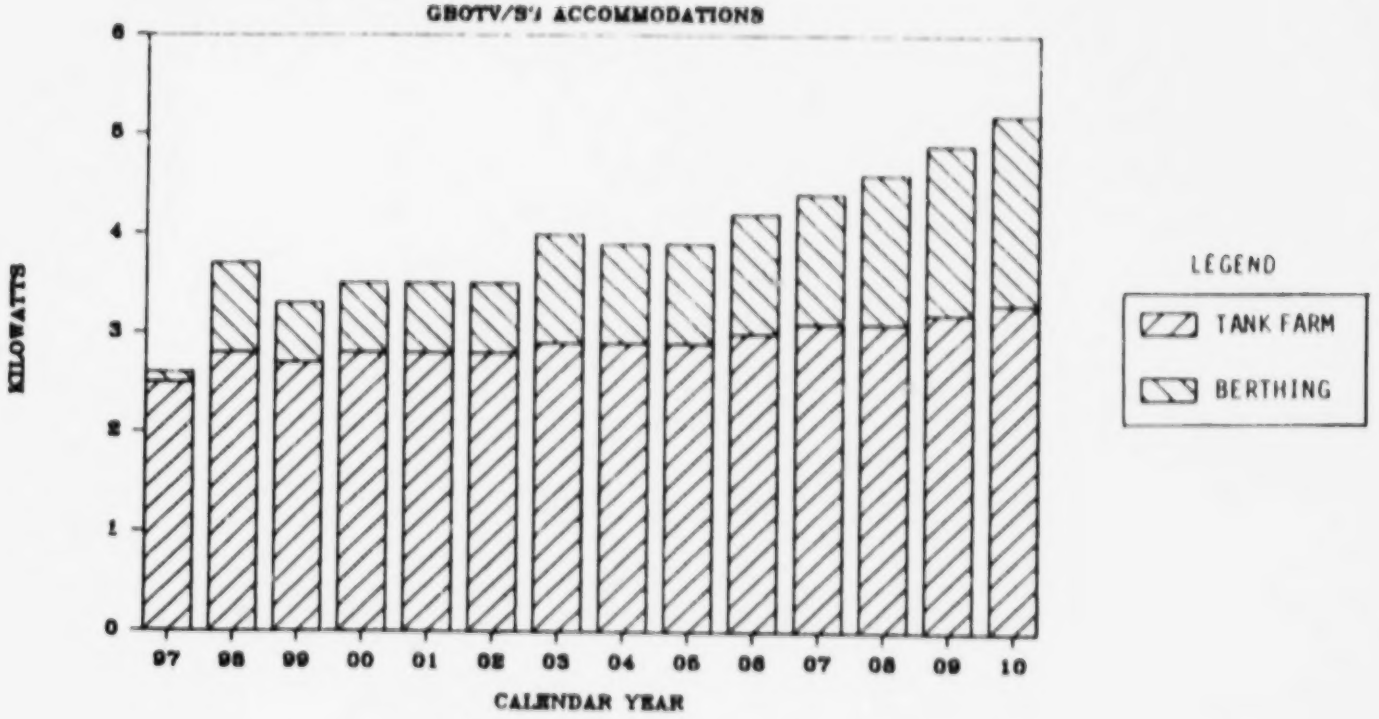

MARTIN MARIETTA

5.2.6 POWER CONSUMPTION REQUIREMENTS - GROUND-BASED OTV PEAK POWER CONSUMPTION

The peak power requirements to support GBOTV processing functions are slightly higher than the SBOTV in the areas of payload mating, launch, and disassembly. However, these changes are directly related to changes in processing requirements between the two systems and should not severely impact Space Station operations or OTV accommodation requirements.

GBOTV PEAK POWER CONSUMPTION

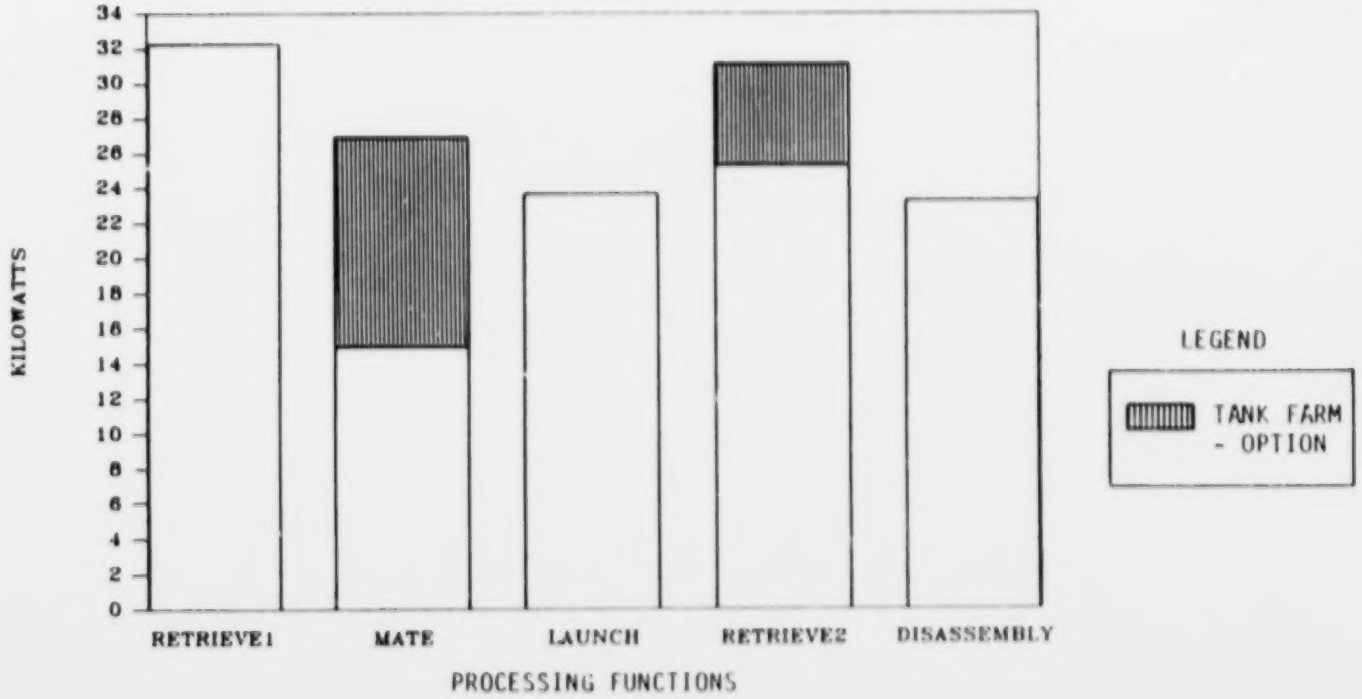

MARTIN MARIETTA

5.2.7 VOLUMETRIC REQUIREMENTS - SPACE-BASED OTV

Volumetric Space-Based OTV requirements are provided for Space Station design consideration. The biggest single volume is associated with fully assembled stage storage. Recognize that for the nominal mission model, the two 81K stages, used for the 80K Lunar Delivery Mission, are not needed until the year 2006. That storage volume alone accounts for more than half of the total requirement.

SBOTV VOLUMETRIC REQUIREMENTS

ITEM	UNIT VOLUME (FT^3)	NOMINAL MISSION MODEL		LOW MISSION MODEL	
		MIN NO REQ'D	TOTAL VOLUME (FT^3)	MIN NO REQ'D	TOTAL VOLUME (FT^3)
55K STAGE	58,080	1	58,080	1	58,080
81K STAGE	58,080	2	116,160	0	-0-
44FT. AEROBRAKE (UNFOLDED)	14,520	2	29,040	1	14,520
44FT AEROBRAKE (FOLDED)	2,102	1	2,102	1	2,102
LH2 TANK	3,259	2	6,518	1	3,259
LO2 TANK	1,220	2	2,440	1	1,220
CORE STRUCTURE	4,836	1	4,836	1	4,836
MAIN ENGINE	101	4	404	2	202
MMS MODULE (TYPICAL)	3	22	66	11	33
CUM TOTAL		37	219,646	19	84,252

5.2.7 VOLUMETRIC REQUIREMENTS - GROUND-BASED OTV

The GBOTV volumetric requirements are somewhat reduced from the SBOTV requirements due to the squatter, more compact design of the stage. Again, recognize that for the nominal mission model, two of the three 54K stages, used for the 80K Lunar Delivery Mission, are not required until the year 2006.

GBOTV VOLUMETRIC REQUIREMENTS

ITEM	UNIT VOLUME (FT^3)	NOMINAL MISSION MODEL		LOW MISSION MODEL	
		MIN NO REQ'D	TOTAL VOLUME (FT^3)	MIN NO REQ'D	TOTAL VOLUME (FT^3)
54K STAGE	40,656	3	121,968	1	40,656
44FT. AEROBRAKE (DISASSEMBLED)	3,154	3	9,462	1	3,154
LH2 TANK	1,589	6	9,534	2	3,178
LO2 TANK	343	6	2,058	2	686
CORE STRUCTURE (WITH AVIONICS & ENGINES)	4,415	3	13,245	1	4,415
CUM TOTAL		21	156,267	7	52,089

5.3 POTENTIAL SPACE STATION EVOLUTIONARY IMPLEMENTATION PLAN

We shall now address a Potential Evolutionary Implementation Plan for Space Station, considering the elements in the order shown.

POTENTIAL SPACE STATION EVOLUTIONARY IMPLEMENTATION PLAN

- ELEMENTS
  - ***SPACE-BASED OTV***
    - PRIORITIZED ELEMENT LISTING
    - TIME PHASING BY ELEMENT
    - SUPPORT CREW SKILL REQUIREMENTS
    - SUPPORT CREW SIZE VS TIME
  - ***GROUND-BASED OTV (OPERATING WITH SPACE STATION)***
    - PRIORITIZED ELEMENT LISTING
    - TIME PHASING BY ELEMENT
    - SUPPORT CREW SKILL REQUIREMENTS
    - SUPPORT CREW SIZE VS TIME

PRECEDING PAGE BLANK NOT FILMED

5.3.1 POTENTIAL SPACE STATION EVOLUTIONARY IMPLEMENTATION PLAN - SPACE-BASED OTV

5.3.1.1 SPACE-BASED OTV ACCOMMODATION ELEMENTS LISTING - ELEMENT #1

The next five charts identify the Space-Based OTV accommodation elements, with subelements, in the priority given. The first chart identifies the propellant tank farm together with its subelements. All of these subelements have been discussed at one place or another within this report. The important point to recognize is that the propellant tank farm is not a functioning entity until all of the subelements have been delivered, assembled, and checked out at Space Station. The propellant tank farm must be fully operational by the time the first Space-Based OTV mission is to be performed from Space Station.

SBOTV ACCOMMODATION ELEMENTS LISTING - ELEMENT #1

- 1 - **PROPELLANT TANK FARM**
  - 1.1 - PROPELLANT STORAGE TANKS
  - 1.2 - PROPELLANT TANK SUPPORT TRUSSES
  - 1.3 - FLUID MANAGEMENT SYSTEM
  - 1.4 - OTV SUPPORT CONTROL SYSTEM
  - 1.5 - PROPELLANT SUBCOOLERS
  - 1.6 - PROPELLANT RESUPPLY/DETANKING UMBILICALS

5.3.1.1 SPACE-BASED OTV ACCOMMODATION ELEMENTS LISTING - ELEMENT #2

This chart identifies the second element, the servicing and maintenance hangar, and its corresponding subelements. Just as with the propellant tank farm, the hangar is not a functioning entity until all of the subelements have delivered, assembled, and checked out at Space Station. The servicing and maintenance hangar must be fully operational before the first Space-Based OTV, delivered as subsystems, can be assembled.

SBOTV ACCOMMODATION ELEMENTS LISTING - ELEMENT #2

- 2 - **SERVICING AND MAINTENANCE HANGAR**

  - 2.1 - HANGAR TRUSSES
  - 2.2 - HANGAR SHELL AND DOORS
  - 2.3 - ROBOTIC ARM RAILS AND CABLING
  - 2.4 - ROBOTIC ARMS
  - 2.5 - OPTICAL BENCH SYSTEM
  - 2.6 - CRADLE CARRIAGE RAILS AND CABLING
  - 2.7- CRADLE CARRIAGES
  - 2.8 - SPACE CRANE RAILS AND CABLING
  - 2.9 - SPACE CRANE
  - 2.10 - ORU STORAGE FIXTURES AND CABLING

5.3.1.1 SPACE-BASED OTV ACCOMMODATION ELEMENTS LISTING - ELEMENT #3

The third element is an OTV ground support segment. The subelements of this segment include a communications link with Space Station and a logistics support system to coordinate the resupply of OTV ORU spares and the propellant tank farm. A number of data bases are identified as subelements. These data bases support the monitoring of various accommodation elements and subelements, the resolution of onorbit anomalies within these elements, and OTV planning for each individual mission.

SBOTV ACCOMMODATION ELEMENTS LISTING - ELEMENT #3

- 3 - **OTV GROUND SUPPORT**
  - 3.1 - COMMUNICATIONS
  - 3.2 - PROPELLANT FARM DATA BASE
  - 3.3 - ROBOTIC ARM DATA BASE
  - 3.4 - LOGISTICS (REFURBISHMENT/RESUPPLY) SUPPORT
  - 3.5 - OTV FUNCTIONAL TEST/CHECKOUT DATA BASE
  - 3.6 - NONDESTRUCTIVE INSPECTION DATA BASE
  - 3.7- CONFIGURATION, SERVICING & MAINTENANCE DATA BASE
  - 3.8 - MISSION PLANNING DATA BASE

5.3.1.1 SPACE-BASED OTV ACCOMMODATION ELEMENTS LISTING - ELEMENT #4

The fourth element is the storage hangar or optional duplicate servicing and maintenance hangar. Discussion of this option has already been presented under Paragraph 3.3.10, Fleet Accommodation Additions. Those subelements associated solely with the duplicate servicing and maintenance hangar are identified with an asterisk. Whichever facility is chosen, it needs to be fully operational before the 81K stage is delivered (unassembled) to Space Station in support of the 80K Lunar Delivery Mission (year 2006).

SBOTV ACCOMMODATION ELEMENTS LISTING - ELEMENT #4

- 4 - **STORAGE HANGAR OR DUPLICATE SERVICING AND MAINTENANCE HANGAR (*)**

  - 4.1 - HANGAR TRUSSES
  - 4.2 - HANGAR SHELL AND DOORS
  - 4.3 - ROBOTIC ARM RAILS AND CABLING
  - 4.4 - ROBOTIC ARMS
  - 4.5 - OPTICAL BENCH SYSTEM*
  - 4.6 - CRADLE CARRIAGE RAILS AND CABLING
  - 4.7- CRADLE CARRIAGES
  - 4.8 - SPACE CRANE RAILS AND CABLING*
  - 4.9- SPACE CRANE*
  - 4.10 - ORU STORAGE FIXTURES AND CABLING

5.3.1.1 SPACE BASED OTC ACCOMMODATION ELEMENTS LISTING - ELEMENT #5

Element five deals with the optional enlargement of the servicing and maintenance hangar. Evolutionary requirements are addressed next in Paragraph 5.3.1.2. If it is decided not to install the largest required hangar initially at Space Station, then, in support of the 80K Lunar Delivery Mission, the hangar must be enlarged. The most complex tasks in this enlargement involve extension of the power and signal umbilicals for the space crane, robotic arms, and cradle carriages.

SBOTV ACCOMMODATION ELEMENTS LISTING - ELEMENT #5

- 5 - **OPTIONAL SERVICING AND MAINTENANCE HANGAR ENLARGEMENT**
  - 5.1 - HANGAR TRUSS EXTENSIONS
  - 5.2 - HANGAR SHELL EXTENSIONS
  - 5.3 - CRADLE CARRIAGE RAIL EXTENSIONS
  - 5.4 - SPACE CRANE RAIL EXTENSIONS

5.3.1.2 SPACE BASED OTV HANGAR EVOLUTIONARY REQUIREMENTS - REV. 7 MISSION MODEL

The facing page chart shows the Revision 7 Mission Model evolutionary path for the hangar when used as a multifunctional facility. The hangar length, shown for both the storable and cryogenic Space Based OTV families, results from the integrated OMV/OTV/Payload stack length. This length is correlated to the year required, for both the nominal and low mission models, and to the driver mission resulting in the longest payload length and/or a two stage OTV delivery. As previously mentioned, the storable 80K Lunar Delivery Mission has been excluded from this Space Station Accommodations Study.

The base hangar weight is based upon the 54 ft x 63 ft Concept 4 hangar, and includes only the weight of the Goodyear inflatable hangar material and the supporting Space Station box beam trusses. Weight of the OTV, carriage cradle(s), manipulator arms, spares, spares support beams, etc., is not included. Notice that, because the Space Station trusses are built up as 9 foot squares, the hangar length extensions must be in multiples of 9 feet.

As can be seen, the length of the hangar is driven by the payload length and the OTV staging configuration required, and must be 60% of its final required length at space-basing IOC.

HANGAR EVOLUTIONARY REQUIREMENTS (REV 7 MISSION MODEL)

YEAR (NOM/LOW MODEL)	MISSION DRIVER	STORABLE		CRYO	
		HANGAR LENGTH	BARE HANGAR WEIGHT	HANGAR LENGTH	BARE HANGAR WEIGHT
1995/1998	MULTIPLE PAYLOAD DELIVERY	72 FT	21.600 LBS	81 FT	24.300 LBS
1997/2000	MANNED GEO SERVICING	81 FT	24.300 LBS	81 FT	24.300 LBS
2006/2007	LUNAR DEL. (80K UP/ 15K DOWN)	EXCLUDED	EXCLUDED	117 FT	35.000 LBS
2008/2009	LUNAR DEL. (80K UP/ ~~0~~ K DOWN)	EXCLUDED	EXCLUDED	126 FT	37.800 LBS
2009/2010	LUNAR DEL. (80K UP/ 10K DOWN)	EXCLUDED	EXCLUDED	135 FT	40.500 LBS

MARTIN MARIETTA

5.3.1.2 SPACE-BASED OTV HANGAR EVOLUTIONARY REQUIREMENTS - REV 8 MISSION MODEL

The changes contained in the Revision 8 Mission Model, particularly for the Manned GEO Servicing Mission and the schedule slip for the low model 80K Lunary Delivery Mission, caused corresponding changes in the hangar evolutionary requirements as shown on the facing page chart.

SBOTV HANGAR EVOLUTIONARY REQUIREMENTS (REV. 8)

ITEM	PAYLOAD LENGTH (FT)	NOMINAL MISSION MODEL		LOW MISSION MODEL	
		YEAR	MINIMUM HANGAR LENGTH (FT.)	YEAR	MINIMUM HANGAR LENGTH (FT.)
PLANETARY/ LARGE GEO SATELLITE DELIVERY	35	1997	72	1999	72
MANNED LUNAR SORTIE	50	2006	117	2015	117
LUNAR BASE ELEMENTS	53	2008	126	2020	126
LUNAR BASE SORTIE/LOGISTICS	60	2009	135	2021	135

5.3.1.3 SPACE-BASED OTV ACCOMMODATIONS TIME PHASING BY ELEMENT

Determination of the Space-Based OTV accommodations element time phasing is actually not very complicated as accommodations must be available for use in quantum level jumps. The propellant tank farm, the servicing and maintenance hangar with robotics, and the ground support elements must all be in place and operational by the time the Space-Based OTV is operational. A storage hangar or duplicate servicing and maintenance hangar, and enlargement of the original servicing and maintenance hangar (if necessary) must be in place and operational before the first scheduled 80K Lunar Delivery Mission.

SBOTV TIME PHASING BY ELEMENT

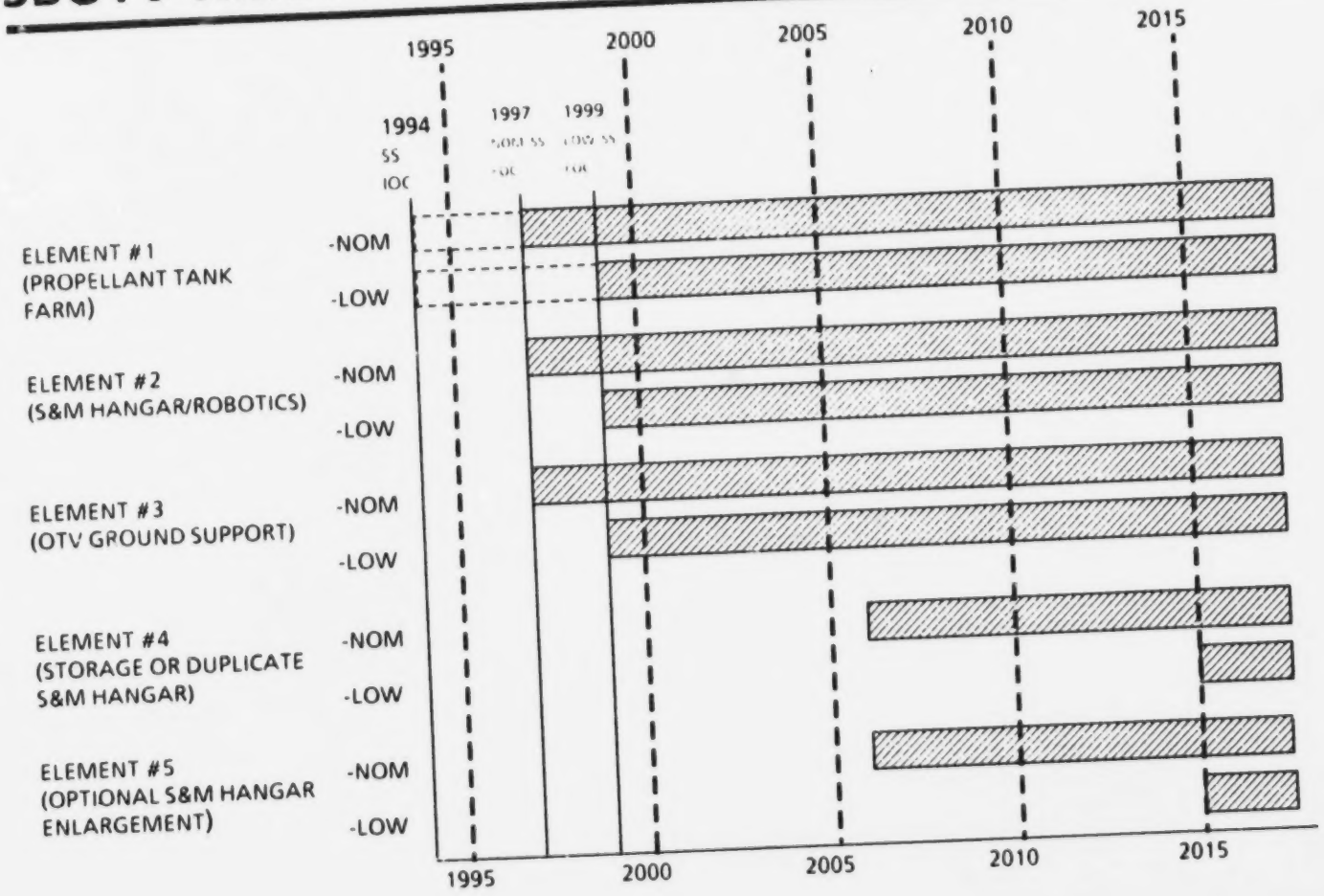

MARTIN MARIETTA

5.3.1.4 SPACE BASED OTV SUPPORT CREW SKILL REQUIREMENTS

Primary crew skills and skill levels necessary to service, maintain, and store a Space Based OTV are indicated in the following chart. The Space Station crew members should be capable of performing the required maintenance functions of the OTV hangar, propellant tank farm and robotics/manipulator systems. An individual with basic skills would be capable of performing minor robotic or space crane operations during pre-and postmission processing. However, an individual with advanced skills is required to monitor or perform the removal and replacement of all OTV components.

During OTV storage, an individual with basic skills is sufficient to monitor OTV health and status and conduct essential diagnostic testing.

SBOTV SUPPORT CREW SKILLS

SKILL / SKILL LEVEL	1 BASIC	2 ADVANCED	3 CONTINGENCY EVA	REMARKS
SPACE CRANE SPECIALIST	X	X	X	EVA - SPACE CRANE REPAIR BASIC - MINOR CRANE OPERATIONS
ROBOTICS SPECIALIST	X	X	X	EVA - ROBOTICS REPAIR BASIC - MINOR ROBOTIC OPERATIONS
PROPULSION SPECIALIST		X	X	EVA - TANK FARM REPAIR
AVIONICS & FLIGHT CONTROL SPECIALIST		X	X	EVA - OTV MAINTENANCE
AEROBRAKE AND STRUCTURES SPECIALIST		X	X	EVA - INSPECTION & MINOR REPAIRS

5.3.1.5 SPACE-BASED OTV SUPPORT CREW REQUIREMENTS - NOMINAL MISSION MODEL REV 8

Crew requirements to support Space-Based OTV processing requirements can be reduced to approximately 1/3 of the total pre and postmission processing time by using automated systems and specialized OTV self-test inspection programs. The following chart depicts the anticipated expenditure of man-hours if an automated system is available at Space-Based OTV IOC.

Propellant tank farm and hangar construction during the first two years will require direct crew involvement for all phases of the construction effort. The elapsed time required for hangar construction could be reduced if the required robotics are installed during the early phases of construction. This approach would reduce the total crew involvement to a minimal level by limiting EVA operations.

Automation and robotics effectively reduces Space-Based OTV crew involvement for the nominal mission model (227 missions) to a level comparable with processing times experienced with the Ground-Based OTV low mission model (53 missions), an improvement in productivity of over 400%.

SBOTV SUPPORT CREW REQUIREMENTS

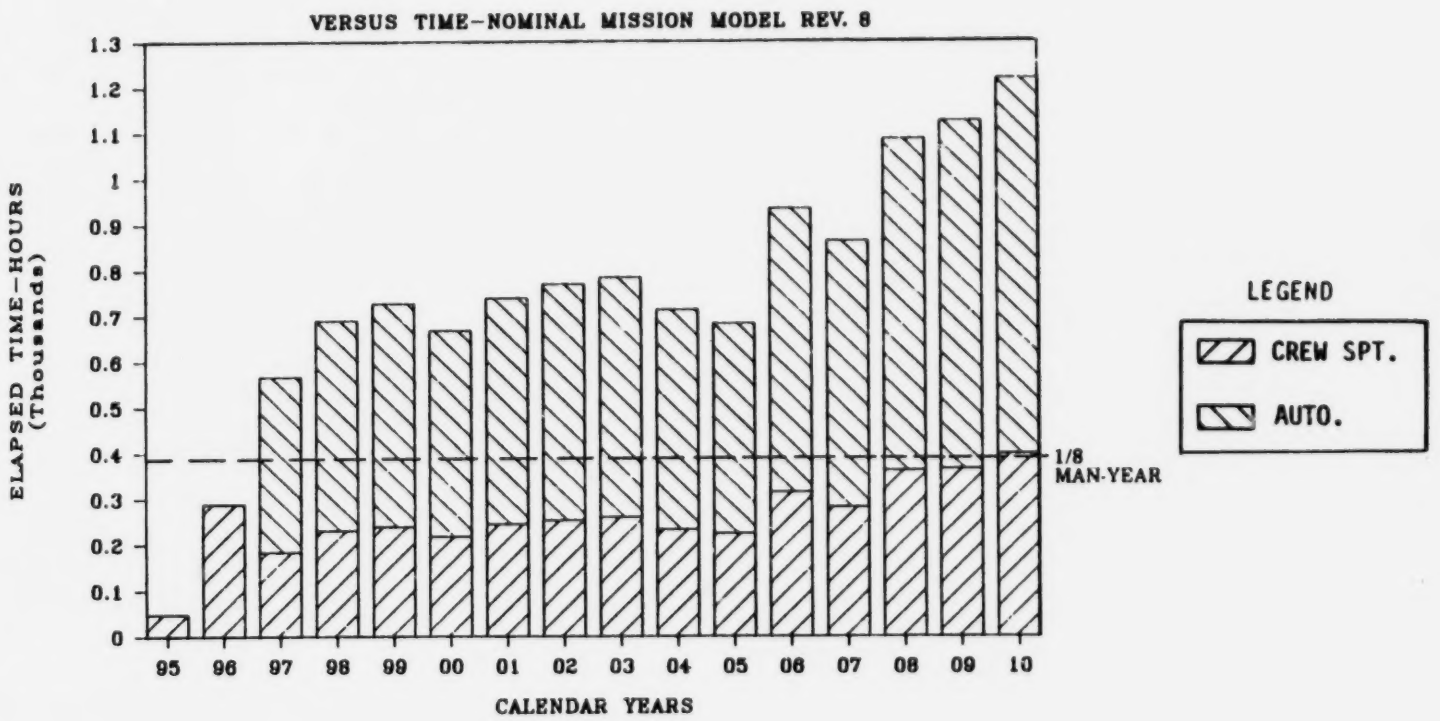

MARTIN MARIETTA

5.3.1.5 SPACE-BASED OTV SUPPORT CREW REQUIREMENTS - LOW MISSION MODEL REV 8

Crew requirements to support the low mission model can be reduced to a minimal level if an automated system is adopted to aid in OTV processing. During the mature years of the program, less than 200 man hours per year will be expended to support OTV operations.

The detailed functional requirement sheets (Appendix A to Volume IV) identify those tasks that will require direct crew involvement as well as the tasks that could be fully automated.

SBOTV SUPPORT CREW REQUIREMENTS

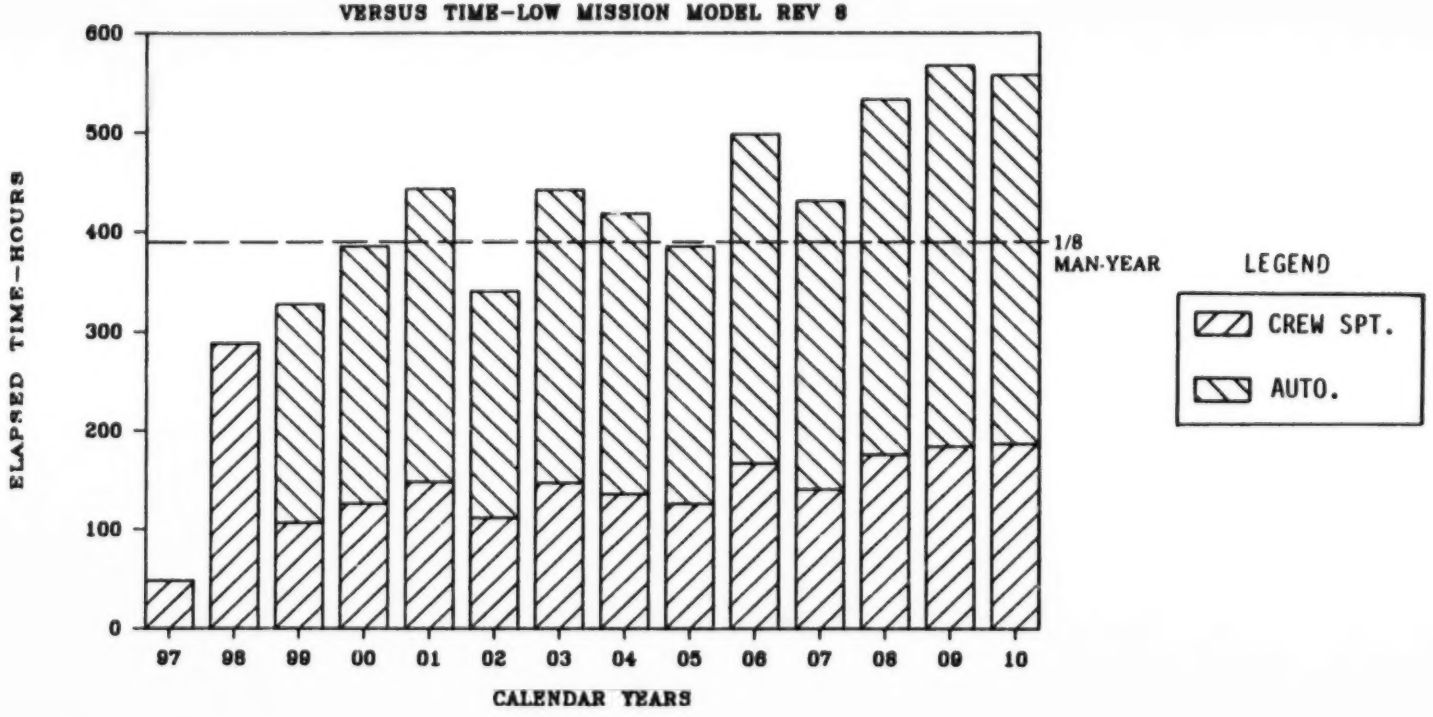

MARTIN MARIETTA

PRECEDING PAGE BLANK NOT FILMED

5.3.2 POTENTIAL SPACE STATION EVOLUTIONARY IMPLEMENTATION PLAN - GROUND-BASED OTV (OPERATING IN CONJUNCTION WITH SPACE STATION)

5.3.2.1 GROUND-BASED OTV ACCOMMODATION ELEMENTS LISTING

The next two charts identify the Ground-Based OTV accommodation elements and subelements. Element #1 is the optional propellant tank farm, which is dependent upon whether Space Station already has such a farm, or whether the Ground-Based OTV has to be resupplied because of the time duration between initial retrieval and mission launch. Subelement 1.4, OTV Support Control System, is included here to support the propellant tank farm; however, if there is no tank farm, it must be included under Element #2 since it also supports the robotics.

The berthing and integration facility, Element #2, is essentially the Space-Based OTV hangar without the hangar shell. While the hangar shell is not required for the Ground-Based OTV, it still may be required to thermally protect payloads during the extended mating and checkout period prior to launch.

GBOTV ACCOMMODATION ELEMENTS LISTING - ELEMENTS #1 & #2

- 1 - **PROPELLANT TANK FARM (*OPTIONAL*)**
  - 1.1 - PROPELLANT STORAGE TANKS
  - 1.2 - PROPELLANT TANK SUPPORT TRUSSES
  - 1.3 - FLUID MANAGEMENT SYSTEM
  - 1.4 - OTV SUPPORT CONTROL SYSTEM (***IF NO ELEMENT #1, INCLUDE IN #2***)
  - 1.5 - PROPELLANT SUBCOOLERS
  - 1.6 - PROPELLANT RESUPPLY/DETANKING UMBILICALS

- 2 - **BERTHING & INTEGRATION FACILITY**
  - 2.1 - BERTHING & INTEGRATION FACILITY TRUSSES
  - 2.2 - ROBOTIC ARM RAILS AND CABLING
  - 2.3 - ROBOTIC ARMS
  - 2.4 - CRADLE CARRIAGE RAILS AND CABLING
  - 2.5 - CRADLE CARRIAGES
  - 2.6 - SPACE CRANE RAILS AND CABLING
  - 2.7 - SPACE CRANE

Element #3, OTV Ground Support, is also needed for the Ground-Based OTV, although not as extensively as for the Space-Based OTV due to the lack of servicing and maintenance, and automation.

Element #4, Storage Beam, is necessary to support storage of disassembled Ground-Based OTVs. The size of the storage beam is indeterminate since it is really a Shuttle manifesting problem. Recognize that from a volume point-of-view, the equivalent of two Shuttle flights are required to return a single Ground-Based OTV to Earth.

Element #5, Optional Berthing and Integration Facility Enlargement, addresses the need for a larger facility to handle the multi-staged 80K Lunar Delivery Mission. If the initial facility does not provide for this capability, then the enlargement will be required.

GBOTV ACCOMMODATION ELEMENTS LISTING - ELEMENTS #3, #4, & #5

- **3 - OTV GROUND SUPPORT**
  - 3.1 - COMMUNICATIONS
  - 3.2 - PROPELLANT FARM DATA BASE (***OPTIONAL***)
  - 3.3 - OTV FUNCTIONAL TEST/CHECKOUT DATA BASE
  - 3.4 - MANUALLY CONTROLLED ROBOTIC ARM DATA BASE
  - 3.5 - LOGISTICS (REFURBISHMENT/RESUPPLY) SUPPORT

- **4 - STORAGE BEAM (DISASSEMBLED GBOTVs)**
  - 4.1 - STORAGE BEAM TRUSSES
  - 4.2 - STORAGE FIXTURES AND CABLING

- **5 - OPTIONAL BERTHING AND INTEGRATION FACILITY ENLARGEMENT**
  - 5.1 - BERTHING AND INTEGRATION FACLITY TRUSS EXTENSIONS
  - 5.2 - CRADLE CARRIAGE RAIL EXTENSIONS
  - 5.3 - SPACE CRANE RAIL EXTENSIONS

5.3.2.2 GROUND-BASED OTV ACCOMMODATIONS TIME PHASING BY ELEMENT

Just as with the Space-Based OTV, Ground-Based OTV accommodation elements #1, 2, and 3 are needed at Space Station FOC, be that 1997 or 1999. Ground-Based OTV missions cannot be performed from Space Station until these elements are fully operational.

Element #4, Storage Beam, is shown as necessary to support the 80K Lunary Delivery Mission. In actuality, as mentioned before, it may be required earlier depending upon Shuttle manifesting problems with returning a partially disassembled Ground-Based OTV to Earth while preparing for a subsequent Ground-Based OTV mission.

Element #5 is needed to support the three-stage Ground-Based OTV 80K Lunar Delivery Mission.

GBOTV TIME PHASING BY ELEMENT

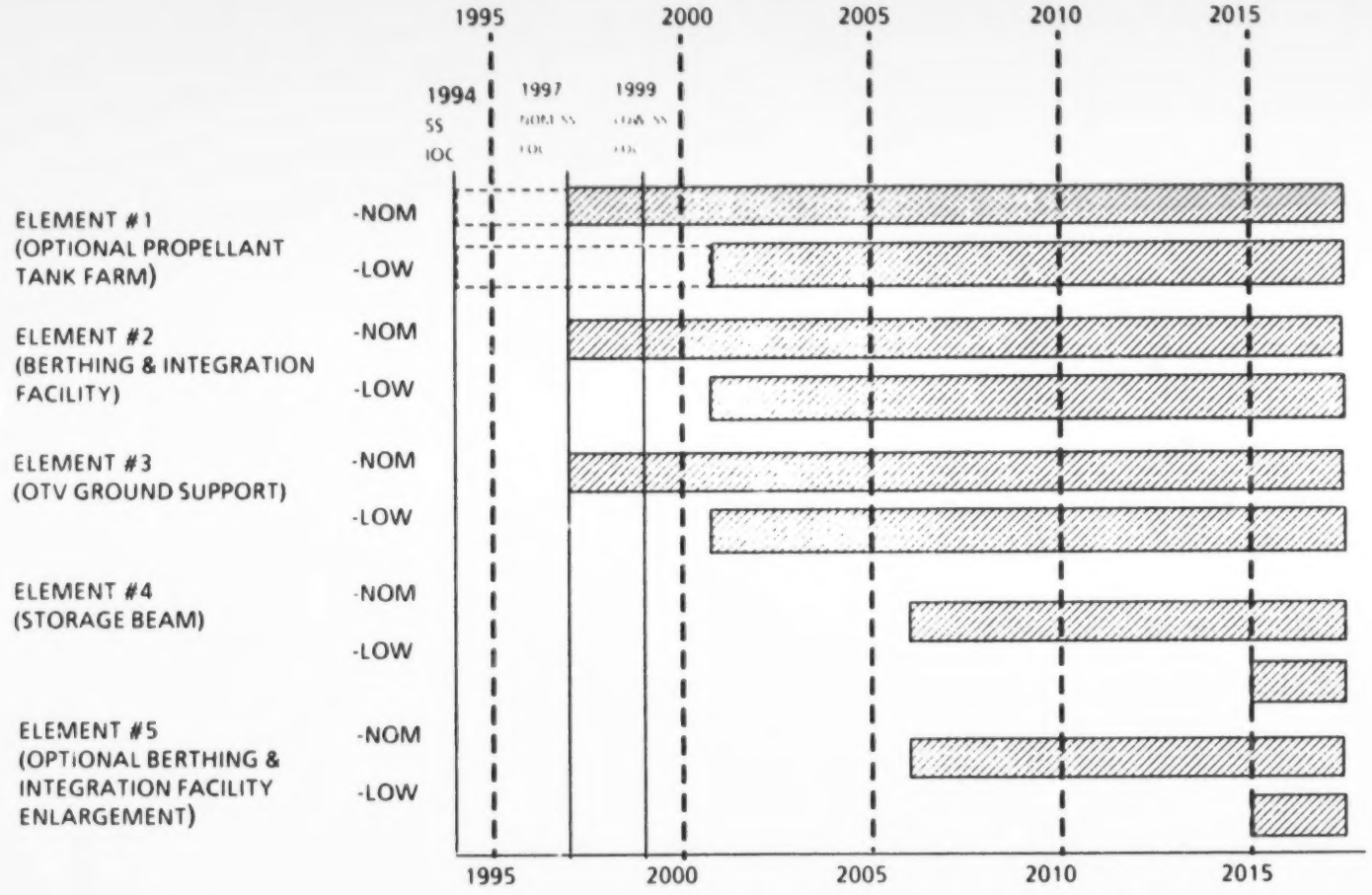

MARTIN MARIETTA

5.3.2.3 GROUND-BASED OTV SUPPORT CREW SKILL REQUIREMENTS

Primary crew skills and skill levels required tc process and store the Ground-Based OTV are indicated in the following chart. The higher level of training is deemed appropriate due to the infrequent requirement to process the Ground-Based OTV fleet.

The avionics and flight control specialist would not be required to possess the advanced skills necessary to perform any maintenance on the Ground-Based OTV. His primary duties would be to perform premission checkout of the Ground-Based OTV prior to deployment from the Space Station; this is considered to be a GO, NO-GO function only.

The space crane, robotic, and propulsion specialists should possess the higher skill levels since they will be directly involved in the retrieval, mating, detanking (if necessary), and disassembly of the OTV during pre and postmission processing.

GBOTV SUPPORT CREW SKILLS

SKILL / SKILL LEVEL	1 BASIC	2 ADVANCED	3 CONTINGENCY EVA	REMARKS
SPACE CRANE SPECIALIST		X	X	EVA - SPACE CRANE REPAIR
ROBOTICS SPECIALIST		X	X	EVA - ROBOTICS REPAIR
PROPULSION SPECIALIST (***OPTIONAL***)		X	X	EVA - TANK FARM REPAIR
AVIONICS & FLIGHT CONTROL SPECIALIST	X			OTV - CHECKOUT PRIOR TO LAUNCH - NO REPAIRS TO OTV

5.3.2.4 GROUND-BASED OTV SUPPORT CREW REQUIREMENTS - NOMINAL MISSION MODEL REV 8

The following chart shows the total man-hours required to process a Ground-Based OTV at Space Station. A comparison of the Space-Based OTV support crew requirements and this chart demonstrates the benefits accrued by automating the OTV processing facilities.

Our analysis has shown that it will take approximately 50 man-hours per stage to process a Ground-Based OTV from initial delivery to Space Station and subsequent return to Earth. This figure does not include any specialized storage requirements that may be required while the stage(s) are awaiting shipment.

GBOTV SUPPORT CREW REQUIREMENTS

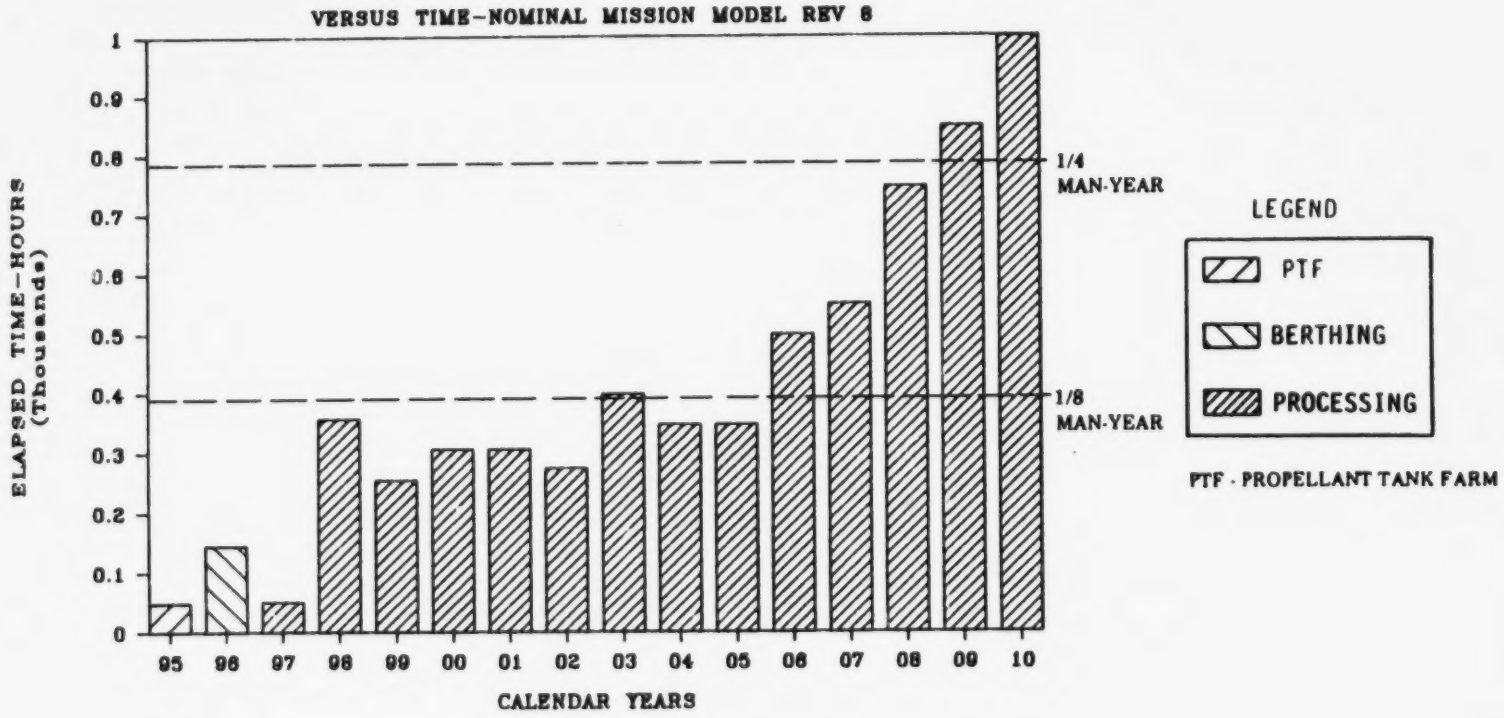

MARTIN MARIETTA

5.3.2.4 GROUND-BASED OTV SUPPORT CREW REQUIREMENTS - LOW MISSION MODEL REV 8

A similar comparison of the Space-Based OTV low mission model and this chart demonstrates the long term benefits gained by automating OTV processing tasks.

GBOTV SUPPORT CREW REQUIREMENTS

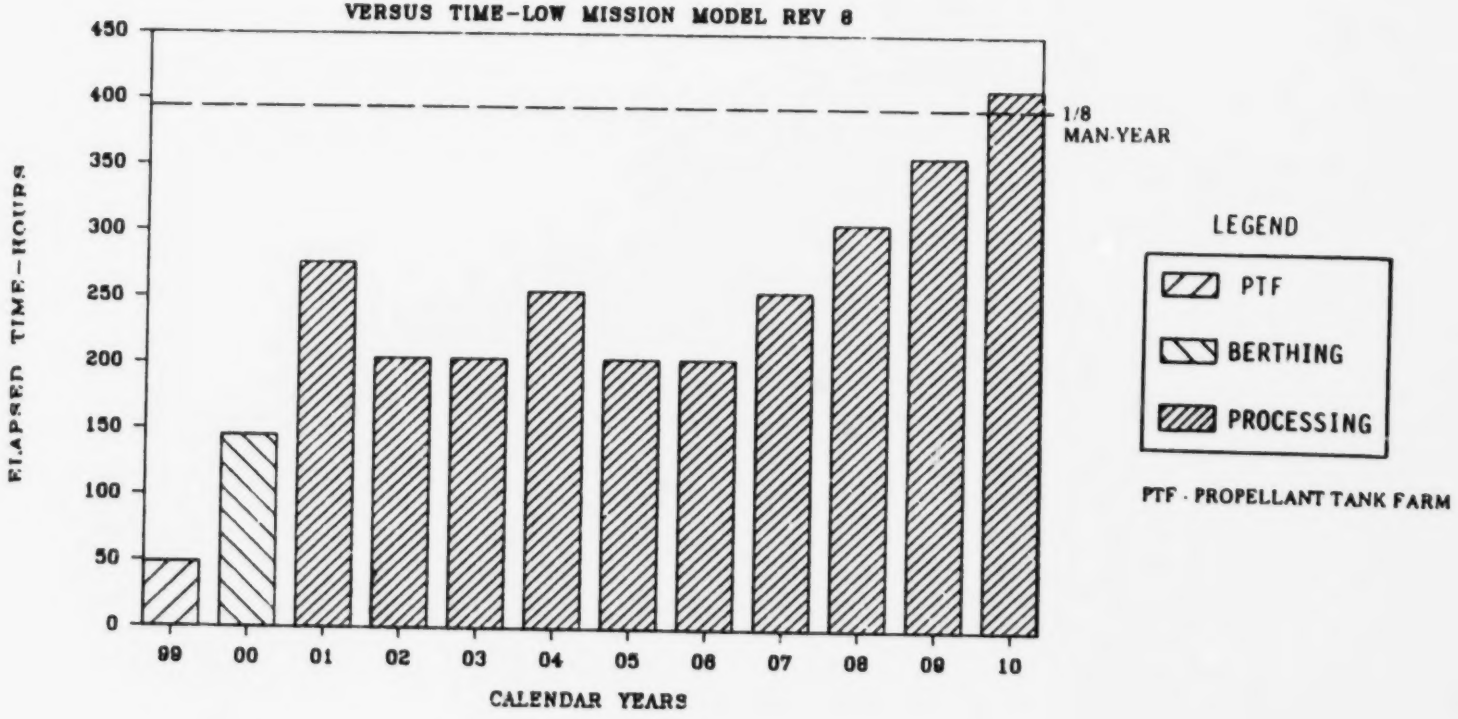

MARTIN MARIETTA

PRECEDING PAGE BLANK NOT FILMED

6.0 SPACE STATION / OTV ACCOMMODATION CONCERNS

6.0 SPACE STATION/OTV ACCOMMODATION CONCERNS

The OTV design and the OTV space-based family pose many impacts to Space Station. OTV accommodations will use much of the available Space Station volumes for storage of stages, spares, propellant, and, in some cases, may cause relocation of appendages and affect station operations. The complexity and relative masses involved with OMV/OTV/Payload stack proximity and retrieval operations in the context of the large appendage density around the Space Station is another cause for concern. The on and off loading of the propellant tank farm, the launch and retrieval of vehicles, the integration and servicing of stages, and the translation of spares, payloads, and commodities from the Shuttle docking port will cause frequent and major variations in the Space Station center-of-mass.

To minimize OTV servicing and maintenance time lines, many of the FOC crew of 12 will have to be proficient in both robotics manipulation and EVA contingency operations.

Obviously, the OMV was not designed or sized with a large, aerobrake-equipped OTV in mind. The OMV, when docked with the OTV, is reduced from 6 degrees-of-freedom (DOF) to 3-1/2 (roll, pitch, yaw, and plus x translation), severely affecting Space Station proximity operations. The OTV ACS thrusters fire along the OMV/OTV docking path and must therefore be disabled during final docking maneuvers. OMV thrusters firing toward the aerobrake will cause rotation of the OTV, complicating docking hardware design and maneuver operations.

Space Station requirements and constraints have also impacted the OTV and OTV accommodations designs. The low-g requirement (10^{-5}) has resulted in the placement of vanes in both the OTV and propellant farm tanks. As a consequence, each OTV stage hauls an additional 200 some pounds of hardware to orbit, requiring an additional 600 pounds of cryo propellant. The low-g requirement also necessitates placement of the hangar and propellant tank farm at or near the station center-of-mass so as to minimize mass change effects. Launch and retrieval operations at the bottom of the Space Station Power Tower configuration would greatly simplify proximity operations, as well as the resupply operations for the propellant tank farm.

SPACE STATION/OTV ACCOMMODATION CONCERNS

- o **OTV IMPACTS UPON SPACE STATION**
  - ***AVAILABLE VOLUMES***
    - STORAGE
    - PROXIMITY/RETRIEVAL OPERATIONS
  - ***SPACE STATION CENTER-OF-MASS***
  - ***CREW SKILL MIX***
- o **OTV IMPACTS UPON OMV**
  - ***OMV / OTV TRANSLATIONAL CAPABILITIES***
  - ***OMV / OTV DOCKING (RECOVERY) CAPABILITIES***
- o **SPACE STATION IMPACTS UPON OTV**
  - ***LOW-G (10-5)***
    - OTV CHANNEL ACQUISITION TANKS
    - PROPELLANT FARM VANE TANKS
  - ***COMPLEX LAUNCH / RETRIEVAL SCENARIO***
    - NEAR SPACE STATION CENTER-OF-MASS TO MINIMIZE IMPACT

6.0 SPACE STATION/OTV ACCOMMODATION CONCERNS (Continued)

Examination of the FOC Space Station as outfitted with the OTV hangar and the propellant tank farm (underneath hangar) shows the volume problems that exist. Stages, spares, and propellant have to be translated from the Shuttle docking port at the bottom of the tower upward to the storage facilities.

FOC SPACE STATION WITH OTV HANGAR

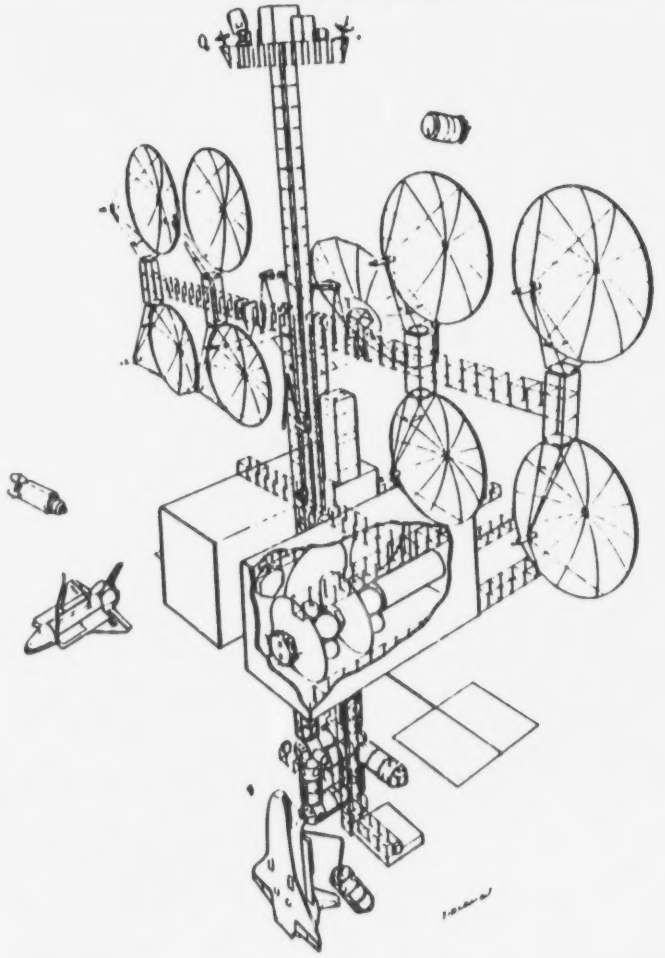

MARTIN MARIETTA

PRECEDING PAGE BLANK NOT FILMED

7.0 SPACE STATION / OTV ACCOMMODATIONS RECOMMENDATIONS

7.0 SPACE STATION/OTV ACCOMMODATIONS RECOMMENDATIONS

With all the problems attendant to Space Station/OTV/OMV interfaces, it would seem appropriate to convene a joint programs working group to address them. This group should include NASA, DOD, and Space Station, OTV, OMV, and Payload contractors, with specific inclusion of those responsible for Space Station requirements such as low-g, power generation, appendage location, length, etc.

Another item for consideration, differing somewhat from current task assignments among the various NASA centers, is to transfer the responsibility for specialized OTV and OMV accommodations to those respective programs. Space Station responsibility for these items results in an equipment-to-equipment interface. As programs proceed through the design process, these interfaces are quite difficult to maintain. If these accommodations were the responsibility of the OTV and OMV programs, the resultant Space Station interface would be equipment-to-facility, in consonance with current practices at KSC.

SPACE STATION/OTV ACCOMMODATIONS RECOMMENDATIONS

- ***CONVENE JOINT PROGRAMS WORKING GROUP***
  - ADDRESS COMMON PROBLEMS
  - PROBLEM RESOLUTION MAY CAUSE CHANGES IN SPACE STATION/OTV/OMV PROGRAMS
  - CURRENTLY NO FORUM FOR THIS PURPOSE
- ***OTV AND OMV SPACE STATION ACCOMMODATIONS WITH DIRECT VEHICLE INTERFACE SHOULD BE PROVIDED BY OTV AND OMV PROGRAMS***
  - CURRENT SPACE STATION INTERFACE
    - EQUIPMENT-TO-EQUIPMENT
    - DIFFICULT TO MAINTAIN DURING DESIGN PROCESS
  - NEW SPACE STATION INTERFACE
    - EQUIPMENT-TO-FACILITY
    - MUCH EASIER TO MAINTAIN

7.0 SPACE STATION/OTV ACCOMMODATIONS RECOMMENDATIONS - RECOMMENDED SPACE STATION/SPACE-BASED OTV PROGRAM RESPONSIBILITIES

The following recommended program responsibility charts provide what we consider to be the appropriate division of responsibility for ensuring OTV accommodation requirements are adequately developed and integrated at OTV IOC. In broad terms, the Space Station should be tasked with the development of any accommodations that would have a direct impact on the structure of the Space Station or manned module. Conversely, the OTV program would lead the development of systems that interface with the OTV during assembly, pre and postmission processing or storage cycles.

This philosophy would require the Space Station to be responsible for the development and integration of the following major areas: robotics less OTV software, hangar structure, servicing umbilicals, propellant tank farm and transfer lines, robotic control console, ground communications and optional storage hangar. The OTV program would be primarily responsible for the following: OTV berthing cradles, OTV end effectors and special maintenance tools, OTV umbilical connectors (signal, power, propellant, pressurant), OTV checkout/nondestructive inspection software, ground support data bases, and OTV storage fixtures.

Payload and OMV Programs would be tasked to provide payload mating cradles (compatible with OTV hangar design) and appropriate checkout and mission planning software for use during pre and postmission processing.

RECOMMENDED SS/SBOTV PROGRAM RESPONSIBILITIES

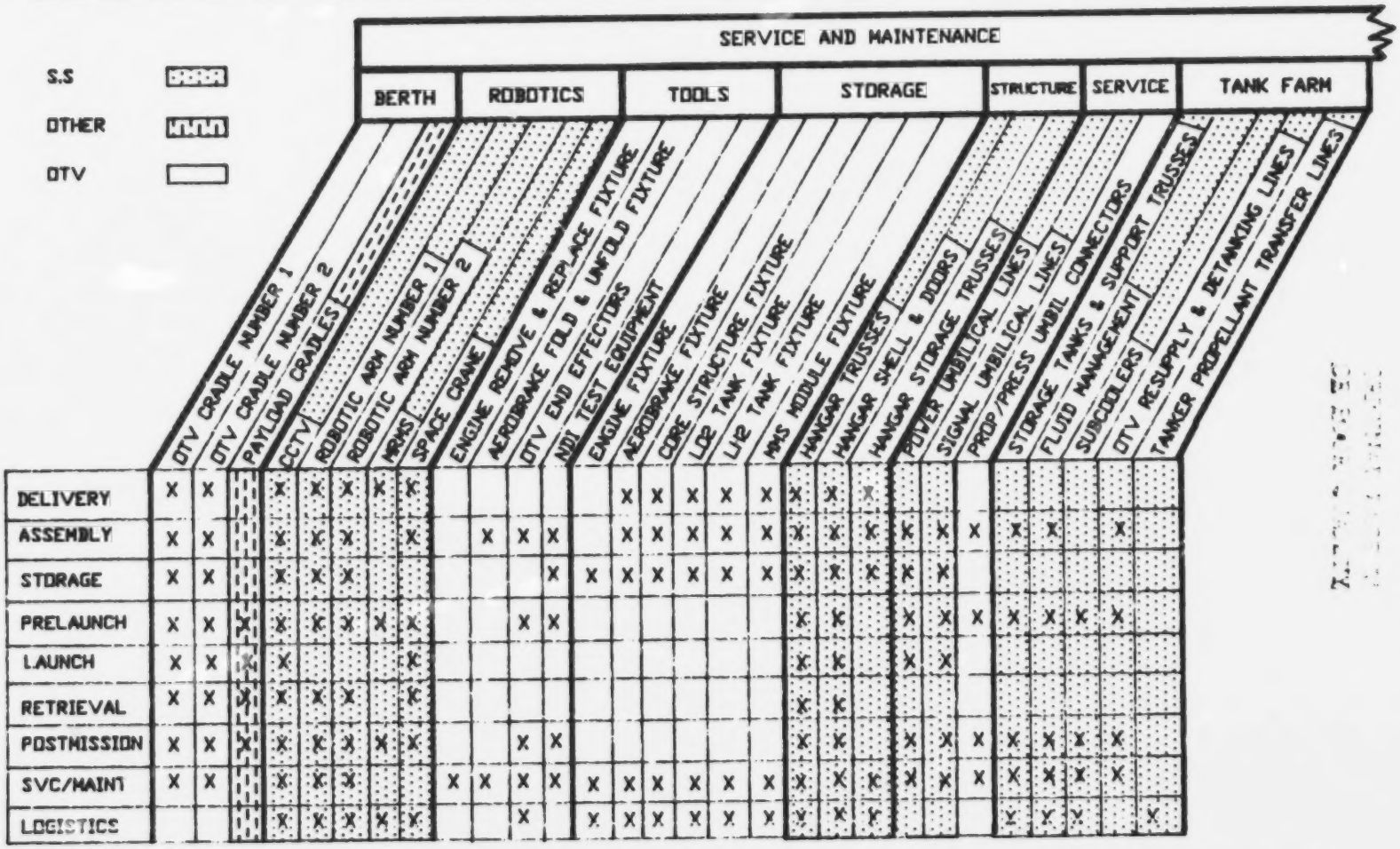

MARTIN MARIETTA

PRECEDING PAGE BLANK NOT FILMED

RECOMMENDED SS/SBOTV PROGRAM RESPONSIBILITIES (CONT.)

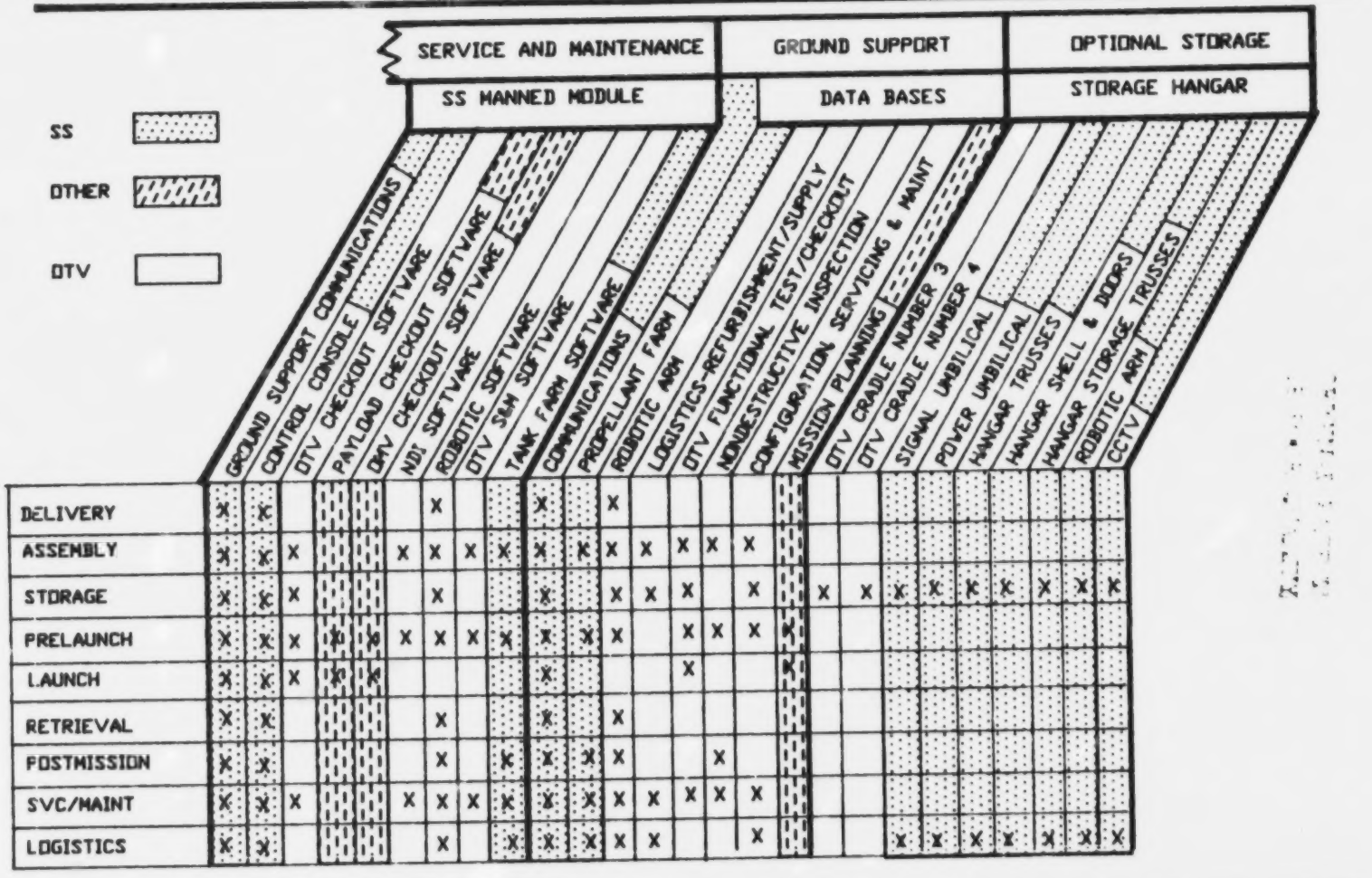

MARTIN MARIETTA

7.0 SPACE STATION/OTV ACCOMMODATIONS RECOMMENDATIONS - RECOMMENDED SPACE STATION/GROUND-BASED OTV PROGRAM RESPONSIBILITIES

The following Space Station/Ground-Based OTV program responsibility charts are based on the same philosophy used to develop the Space-Based OTV program responsibility charts. This approach will fully support the evolutionary plan for the Ground-Based OTV system into an operational Space-Based OTV system without changing program direction or responsibilities.

RECOMMENDED SS/GBOTV PROGRAM RESPONSIBILITIES (CONT.)

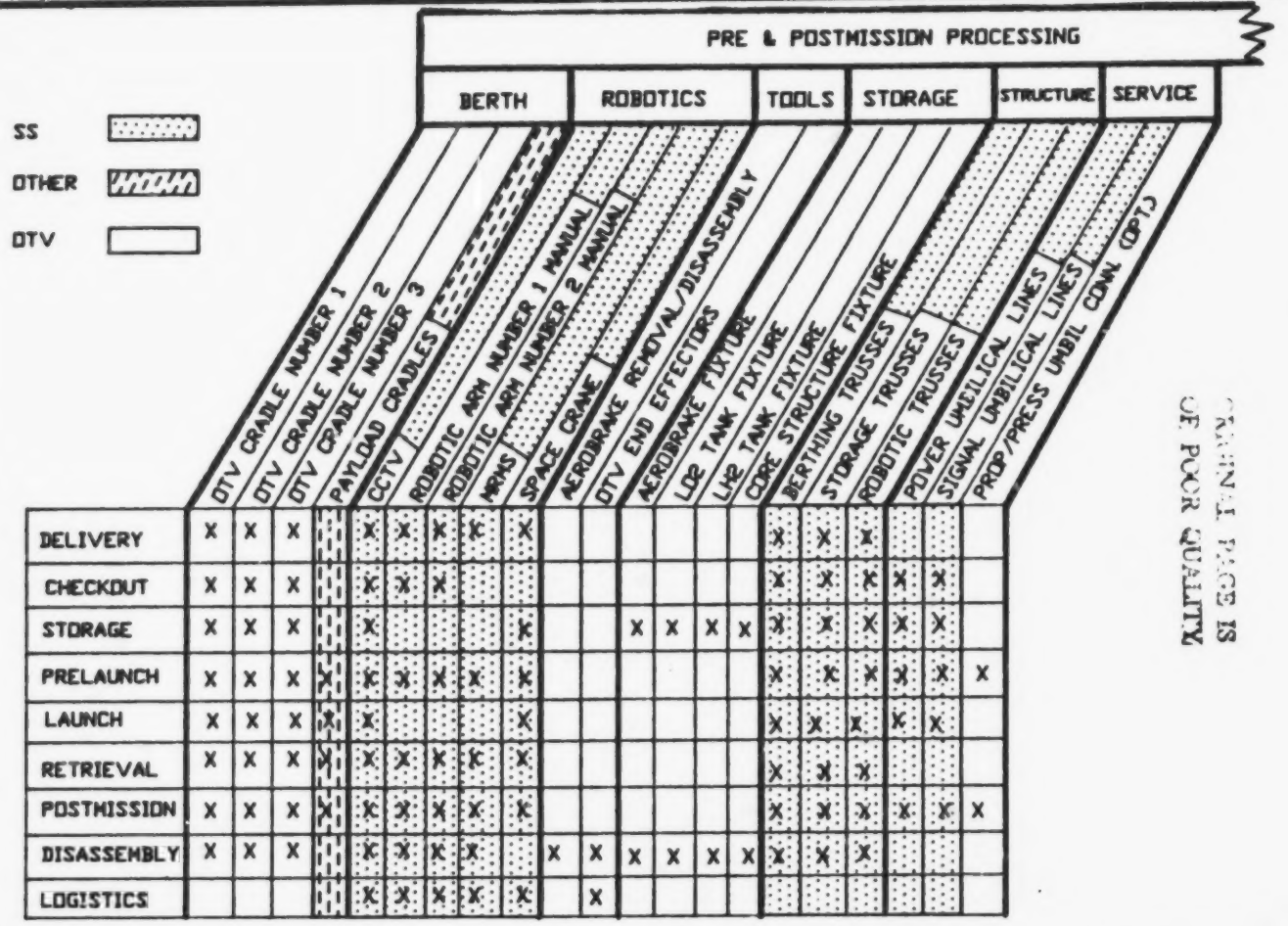

ORIGINAL PAGE IS
OF POOR QUALITY

MARTIN MARIETTA

RECOMMENDED SS/GBOTV PROGRAM RESPONSIBILITIES (CONT.)

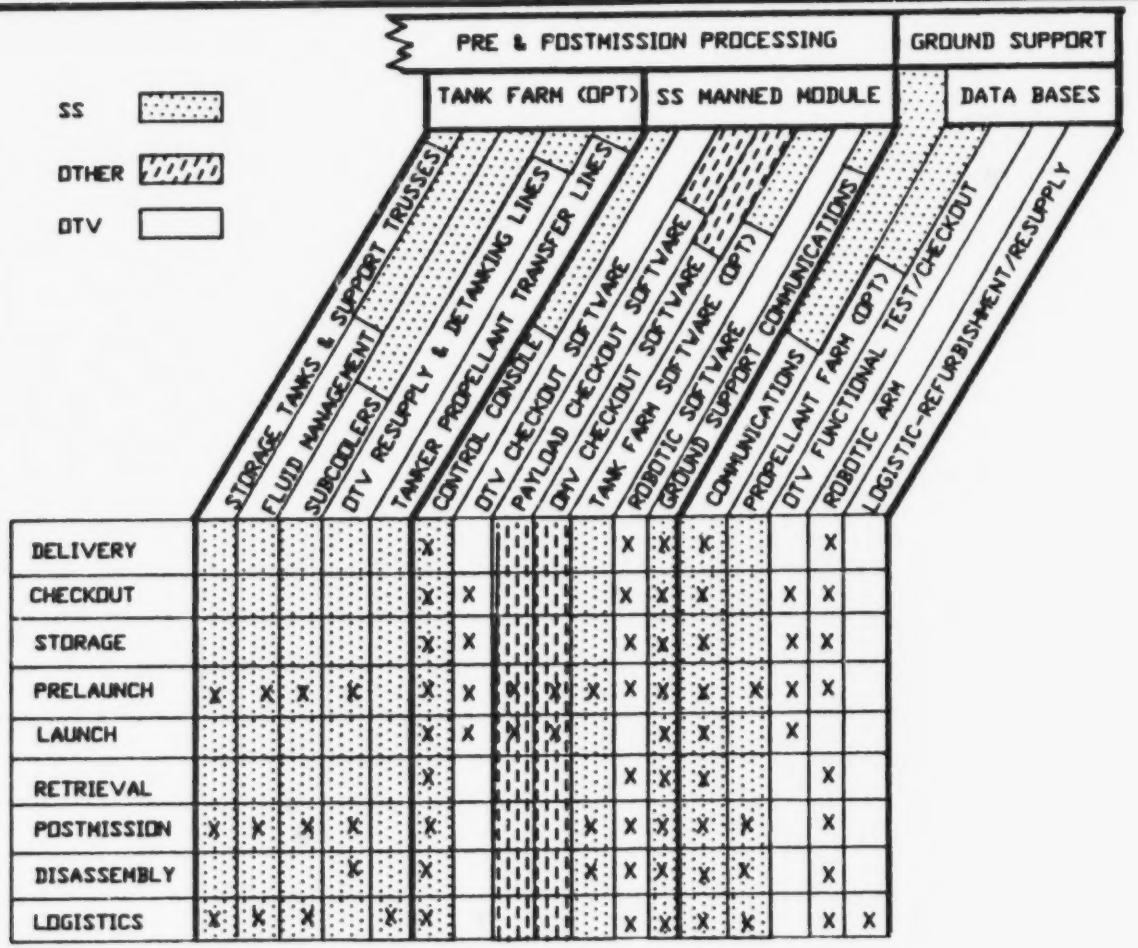

MARTIN MARIETTA

7.0 SPACE STATION/OTV ACCOMMODATIONS RECOMMENDATIONS - POTENTIAL USES FOR SPACE STATION/OTV ACCOMMODATIONS

In considering potential other uses for the Space Station/OTV accommodations defined within this volume, the servicing/maintenance/propellant resupply of payloads and the OMV are prime candidates. Payload users, especially those with the capability to service and maintain subsystems onorbit, may desire to use the facilities to "burn-in" payload subsystems so as to identify potential failures.

The cryogenic propellant tank farm offers the Space Station a consumables resupply capability for reboost/attitude control, for auxiliary power generation, and potentially for crew air and water.

The nondestructive inspection sensors and systems could be used to verify the integrity of Space Station subsystems and systems.

And finally, one could conceive, considering the size and volume of the servicing and maintenance hangar, the robotic assembly of large space structures, either wholly or in part, while under positive control.

POTENTIAL USES FOR SPACE STATION/OTV ACCOMMODATIONS

- ***SERVICING & MAINTENANCE / PROPELLANT RESUPPLY***
  - PAYLOADS
  - OMV
- ***PAYLOAD BURN-IN & CHECKOUT***
- ***SPACE STATION CONSUMABLES RESUPPLY***
  - REBOOST/ATTITUDE CONTROL
  - AUXILIARY POWER GENERATION (FUEL CELLS)
  - BREATHABLE AIR
  - POTABLE WATER
- ***SPACE STATION SUBSYSTEM NON-DESTRUCTIVE INSPECTION***
- ***LARGE SPACE STRUCTURES ASSEMBLY***

7.0 SPACE STATION/OTV ACCOMMODATIONS RECOMMENDATIONS - AREAS REQUIRING ADDITIONAL STUDY

Those areas we believe to require additional study from the OTV perspective are shown on the facing page chart. In the area of zero-g cryogenic fluid transfer and storage, much more data and investigation is needed before the storage system and the propellant transfer scenario is finalized.

Automation and robotics are the key to efficient space-based servicing and maintenance activities while minimizing impact to the Space Station crew. Definition of this system, along with extensive computer robotics simulations, will allow developments of requirements for consideration by Space Station.

The OTV control console requirements must be defined so that the total scope of hardware and software requirements can be understood, particularly if the Aft Station Computer and Display System (ASCADS), currently being considered for the Shuttle, is also to be considered for Space Station.

The non-destructive inspection systems and sensors need to be defined so that interface requirements can be defined, and the resultant interaction between the systems and the control console can be considered.

AREAS REQUIRING ADDITIONAL STUDY

- ***ZERO-G CRYOGENIC FLUID TRANSFER & STORAGE***
  - PROPELLANT TANK FARM DESIGN
  - CRYOGENIC FLUID QUICK DISCONNECT
  - TANK DESIGN
  - FLUID MANAGEMENT SYSTEM DESIGN
- ***AUTOMATION & ROBOTICS SYSTEM DEFINITION***
- ***COMPUTER ROBOTICS SIMULATIONS***
  - ARM LENGTH & DIAMETERS
  - MOTOR SIZES
  - SWEPT VOLUMES
- ***OTV CONTROL CONSOLE REQUIREMENTS DEFINITION***
- ***NON-DESTRUCTIVE INSPECTION SYSTEMS AND SENSORS DEFINITION***

PRECEDING PAGE BLANK NOT FILMED

8.0 SPACE STATION / ACCOMMODATIONS TRADE STUDIES AND ANALYSES

8.1 OTV PROPELLANT STORAGE-STUDY REQUIREMENTS

The facing chart identifies the baseline requirements used in performing the OTV propellant storage trade studies. The propellant requirements for both cryogenic and storable tank farms were based on servicing at least two OTV missions with resupply.

OTV PROPELLANT STORAGE STUDY REQUIREMENTS

- THE CRYOGENIC STORAGE FACILITY WILL CONTAIN *196K POUNDS* OF PROPELLANT (28K POUNDS OF LH_2 AND 168K POUNDS OF LOX) AFTER 30 DAYS OF STORAGE
- PROPELLANT LOADING OF THE OTV AND TANKER RESUPPLY WILL BE ACCOMPLISHED IN *4 HOURS* OR LESS
- PROPELLANT STORAGE TANKS WILL BE SIZED TO *FIT* IN THE *ORBITER CARGO BAY*
- THE STORABLE STORAGE FACILITY WILL HAVE THE CAPACITY TO STORE *354K POUNDS* OF PROPELLANT (118K POUNDS OF MMH AND 236K POUNDS OF N_2O_4)
- THE STORAGE FACILITY WILL BE CAPABLE OF OPERATING IN 10^{-5} *G'S* OR LESS IF LOCATED ON THE SPACE STATION OR A FREE FLYER PLATFORM. THE TETHERED STORAGE FACILITY WILL OPERATE IN 10^{-4} *G'S* OR LESS
- BOTH THE OTV AND REFUELING TANKER WILL BE CAPABLE OF OPERATING IN THE ENVIRONMENT OF THE STORAGE FACILITY
- THE *FOC SPACE STATION CONFIGURATION* WILL BE USED FOR THE STORAGE TANK FARM LOCATION STUDY

8.1.1 CRYOGENIC PROPELLANT STORAGE-TRADE STUDY RESULTS

The"vented through resisto-jet" storage option was selected as the optimum storage method. This option provided fewer active elements (with lower associated maintenance and operations) and also provided lower initial costs since technology for long-life refrigerators or reliquifiers was not required. Potential contamination of Space Station was avoided by accelerating the waste gasses (boiloff) away from the Space Station through resisto-jets. The cost impacts of the hydrogen boiloff losses can be reduced by using the boiloff for reboost, fuel cells or RCS propulsion. This trade study is fully documented in Martin Marietta Corporation Internal Technical Memorandum, TM I.5.2.0.0-01.

CRYOGENIC STORAGE TRADE STUDY RESULTS

EVALUATION FACTOR		VENTED: RESISTO-JET		VENTED: H2 ACCUMULATOR		REFRIGERATION		RELIQUEFACTION	
	WF	RATING	SCORE	RATING	SCORE	RATING	SCORE	RATING	SCORE
COST	0.2	7	1.4	1	0.2	6	1.2	3	0.6
RELIABILITY/MAINT	0.25	8	2.0	8	2.0	5	1.25	4	1.0
MAINTAINABILITY	0.15	8	1.2	8	1.2	5	0.75	5	0.75
OPERATIONS	0.15	8	1.2	6	0.9	5	0.75	4	0.60
TECHNICAL RISK	0.10	7	0.7	7	0.7	5	0.5	4	0.4
MASS/VOLUME	0.05	7	0.35	6	0.3	6	0.3	5	0.25
NEW TECHNOLOGY	0.10	7	0.7	7	0.7	5	0.5	4	0.4
TOTALS		7.55		6.00		5.25		4.00	

0 (POOR) - 10 (GOOD)

8.1.1 CRYOGENIC PROPELLANT STORAGE - THERMAL CONTROL GROUND RULES AND ASSUMPTIONS

The assumptions and ground rules used in the analysis are shown, as well as definition of the terms found on later pages.

THERMAL CONTROL GROUND RULES AND ASSUMPTIONS

- ***REFRIGERATION***: HEAT IS INTERCEPTED AT THE TANK WALL OR AT A VCS WITHIN THE MLI
- ***RELIQUEFACTION***: BOILOFF VAPOR IS RECONDENSED AND RETURNED TO A TANK USING A REFRIGERATOR OR RELIQUEFACTION CYCLE
- ***VCS***: (VAPOR COOLED SHIELD) A THIN SHIELD PLACED IN THE MLI TO CONTROL THE TEMPERATURE GRADIENT AND INTERCEPT HEAT. A COUPLED VCS USES THE GH_2 VAPOR TO REFRIGERATE THE LO_2 TANK VCS TO 220° R
- ***TVS***: THERMODYNAMIC VENT SYSTEM USING A JOULE-THOMSON VALVE AND A TANK MOUNTED HEAT EXCHANGER. TVS PRESSURE ASSUMED WAS 5 PSIA

8.1.1 CRYOGENIC PROPELLANT STORAGE - PROPELLANT TANK FARM SCHEMATIC

The Space Station cryogenic storage and transfer schematic is shown on the opposite page. A thermodynamic vent system provides passive thermal and tank pressure control. Liquid hydrogen is throttled in a Joule-Thomson valve and passed through a tank heat exchanger and vapor cooled shield. This vapor is then routed to a LOX tank heat exchanger and vapor cooled shield to cool the oxygen. The oxygen is not vented since there is sufficient gaseous hydrogen available for complete refrigeration. Finally the vapor is compressed and stored for use as propulsion on the Space Station or exhausted at high velocity with resisto-jets.

The cryogenic propellants are transferred to the OTV or facility in a no-vent fill process. Analysis performed on our Cryogenic Fluid Management Facility contract indicates this is possible provided sufficient heat transfer and mixing between the liquid and vapor can occur in the tank under low-g conditions. Verifying this, however requires an orbital test. The OTV tank chilldown is done by subcooling the incoming liquid and performing the no-vent fill. If tank pre-chill is required, the power and/or timelines will increase. The vapor generated in facility line chilldown for OTV fill is routed through the subcooler lines (without throttling), compressed, and stored.

The subcooler used in the no-vent fill operates under the same principle as the thermodynamic vent system. The vapor generated in the process is adiabatically compressed and used to pressurize the supply tank (i.e., tanker, facility, or OTV). The subcooler is located as close to the receiver tank as possible to prevent heat leak from reducing the degree of subcooling.

For efficient autogenous pressurization, the facility will use a vane device to position the ullage. This device is not used for venting since the propellants are stored near saturation conditions and the attendant boiling could cause liquid to be shed off the vane and vented. Vane devices could require quiescent time after a docking maneuver between the tanker or OTV and the Space Station to allow the liquid to reposition. A channel was used in our Viking tank to help liquid to communicate with the bottom of the vane. Although an open capillary device in a large cryogenic tank is still unproven technology, our preliminary analysis presented in the 2nd quarter review indicates the concept is feasible.

OTV PROPELLANT TANK FARM SCHEMATIC

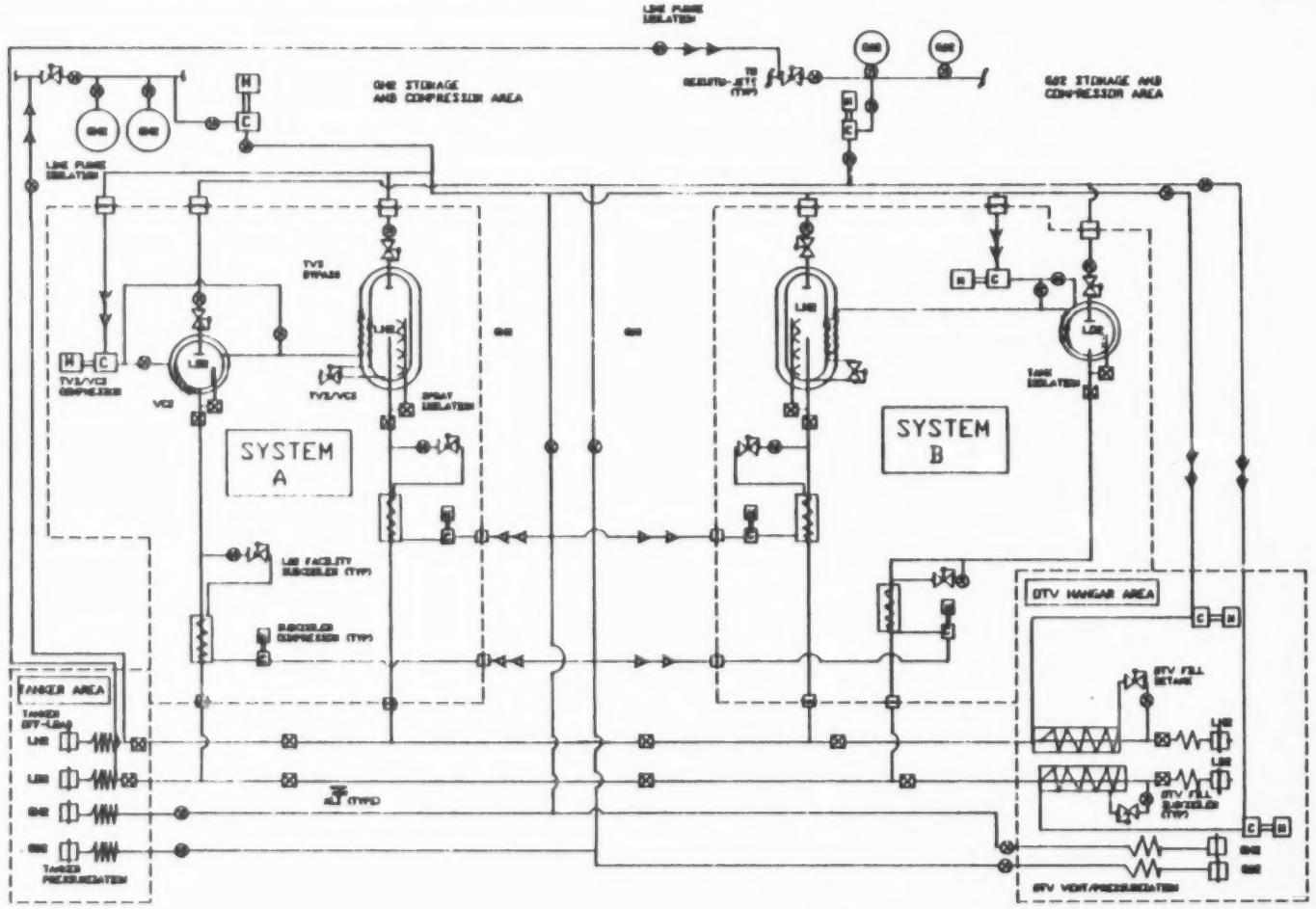

MARTIN MARIETTA

8.1.1 CYROGENIC PROPELLANT STORAGE - SPACE-BASED LIQUID NO-VENT FILL

We have baselined the no-vent fill for OTV at Space Station. Direct venting in low-g is very difficult if not impossible during OTV fill. Vane devices have been tested for filling storable propellants in low-g while venting*, but because of the low surface tension of cryogens, higher volumetric flow rate of LH_2, and thermodynamic effects, these devices could be difficult to design for filling the large OTV tanks. Conversely, a thermodynamic or no-vent fill presents an analytical and experimental challenge. The heat and mass transfer that will occur in the low-g environment is difficult to predict with confidence in the absence of orbital flight data. Also additional tank hardware to promote mixing such as pumps or spray nozzles are required. Since both concepts require development, the latter was selected because it provides benefits to an OTV that is resupplied at a low-g facility. For example, propellant gaging in low-g could be simplified if no vapor is lost during fill because only the inflow needs to be measured. Also, the TVS mixer in the OTV could be used to enhance the heat and mass transfer during fill.

A simple thermodynamic analysis from our CFMF program shows the basic relationship between initial tank temperature, tank mass, final system temperature and pressure, and propellant density for the no-vent fill process. The lighter OTV will probably not require a pre-chill provided sufficient heat and mass transfer occurs in the system during fill. The final pressure can also be reduced by providing propellant subcooled 3 to 5 psi below the desired pressure. Our tank farm concept is configured to provide subcooled propellant with respect to one atmosphere. Liquid hydrogen is shown because it is more difficult to transfer than liquid oxygen.

* Ref: Low-g Propellant Transfer Using Capillary Devices, S. M. Dominick and J. R. Tegart, Martin Marietta Denver Aerospace AIAA-81-1507 July, 1981.

SPACE-BASED LIQUID HYDROGEN NO-VENT FILL

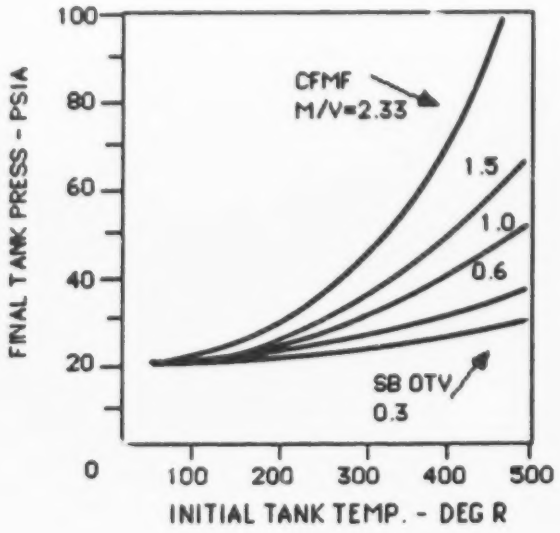

EFFECT OF INITIAL TANK TEMPERATURE ON FINAL PRESSURE DURING NO-VENT FILL

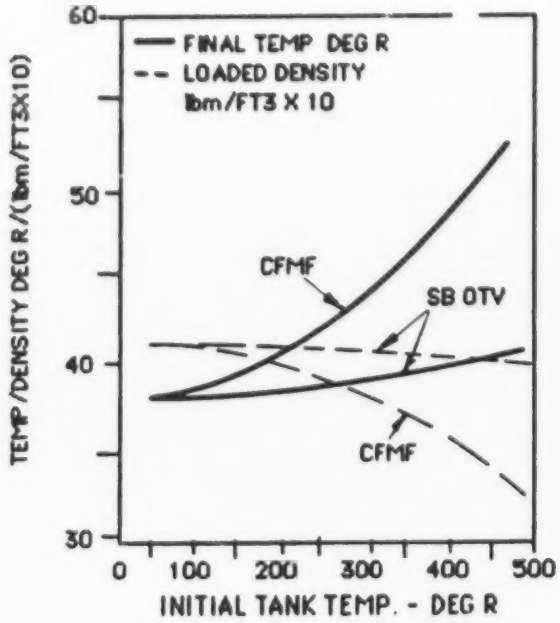

EFFECT OF INITIAL TANK TEMPERATURE ON LOADED DENSITY

REF: CRYOGENIC FLUID MANAGEMENT FACILITY CONCEPT DEFINITION STUDY
MARTIN MARIETTA, NASA CR 174630 DEC, 1983

MARTIN MARIETTA

8.1.1 CRYOGENIC PROPELLANT STORAGE - PERFORMANCE OF 100 MLB RESISTO-JET: CHAMBER PRESSURE - 2 ATM

The 100 MLB resisto-jet can be operated to adjust performance and electrical power usage depending on requirements. For reboost performance, higher specific impulse with higher power usage can be selected. For expelling waste gasses, a lower specific impulse with associated power savings can be selected. Four of the 100 MLB resisto-jets were chosen for the storage tank farm which provides ample capacity for expelling H_2 boiloff losses or maintaining Space Station position for drag losses.

PERFORMANCE OF 100 MLB RESISTOJET: CHAMBER PRESSURE - 2ATM

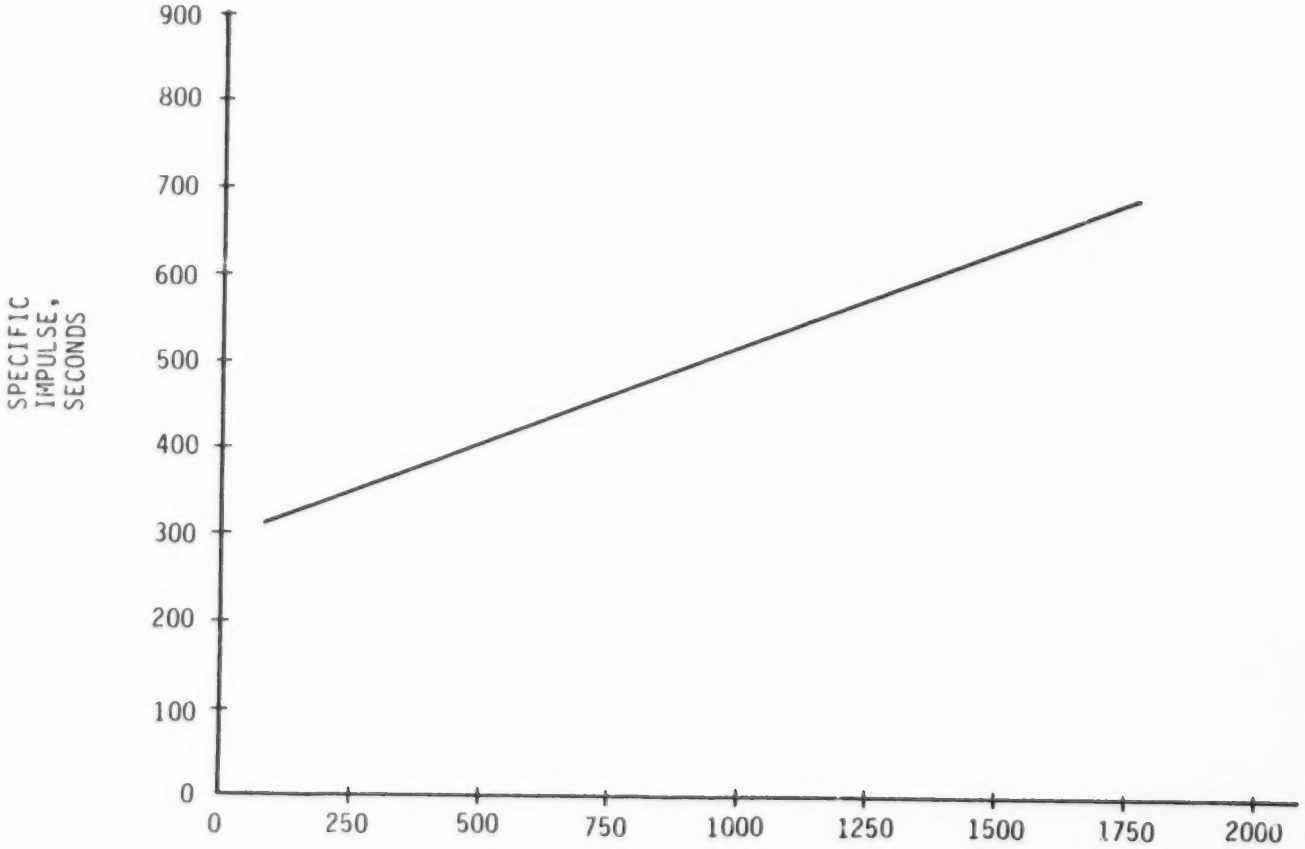

REFERENCE: THE MARQUARDT COMPANY

MARTIN MARIETTA

8.1.1 CRYOGENIC PROPELLANT STORAGE - PARA TO ORTHO TVS/VCS CONVERTER

The performance of a vented system can be improved by converting the para hydrogen vapor to equilibrium hydrogen at the elevated VCS temperature. The difference in the relative orientation of the nuclear spin of the individual atoms in the hydrogen molecule results in two forms of hydrogen: ortho (parallel spin) and para (anti-parallel spin.) Para hydrogen has a lower energy level relative to ortho-hydrogen. At room temperature, hydrogen is 25% para and 75% ortho and is referred to as normal hydrogen. At liquid hydrogen temperatures, the composition is about 99.8% para-hydrogen and is therefore commonly called para-hydrogen. The composition is a function of temperature and is relatively insensitive to pressures. At a given temperature there is a corresponding equilibrium hydrogen composition. For increasing temperature, the percent of para-hydrogen decreases and the conversion from the lower temperature composition is an endothermic reaction. The conversion will normally occur over several days but its rate can be increased with the use of a catalyst. The figure shows the increase in the enthalapy change of the boiloff at various efficiencies and VCS temperature. It was found from:

$$\frac{[\Delta h \text{ with conversion} - \Delta h \text{ without}]}{\Delta h \text{ without}} \quad X100$$

where

$$\Delta h = h_{vcs} - h_{liq}$$

The efficiency is determined by such parameters as catalyst length which increases pressure drop, particle size, level of activity of the catalyst, flowrate, degradation, and catalyst poisoning. Our work on the long-term cryogenic storage contract for AFRPL showed a 8% improvement in storage life with 50% efficient catalyst, and 14% improvement with a 90% efficient catalyst. For estimating the tank TVS/VCS, we used a 75% efficient catalyst, which corresponds to about a 10% reduction in boiloff.

PARA TO ORTHO TVS/VCS CONVERTER

PARA TO EQUILIBRIUM H2 CONVERSION

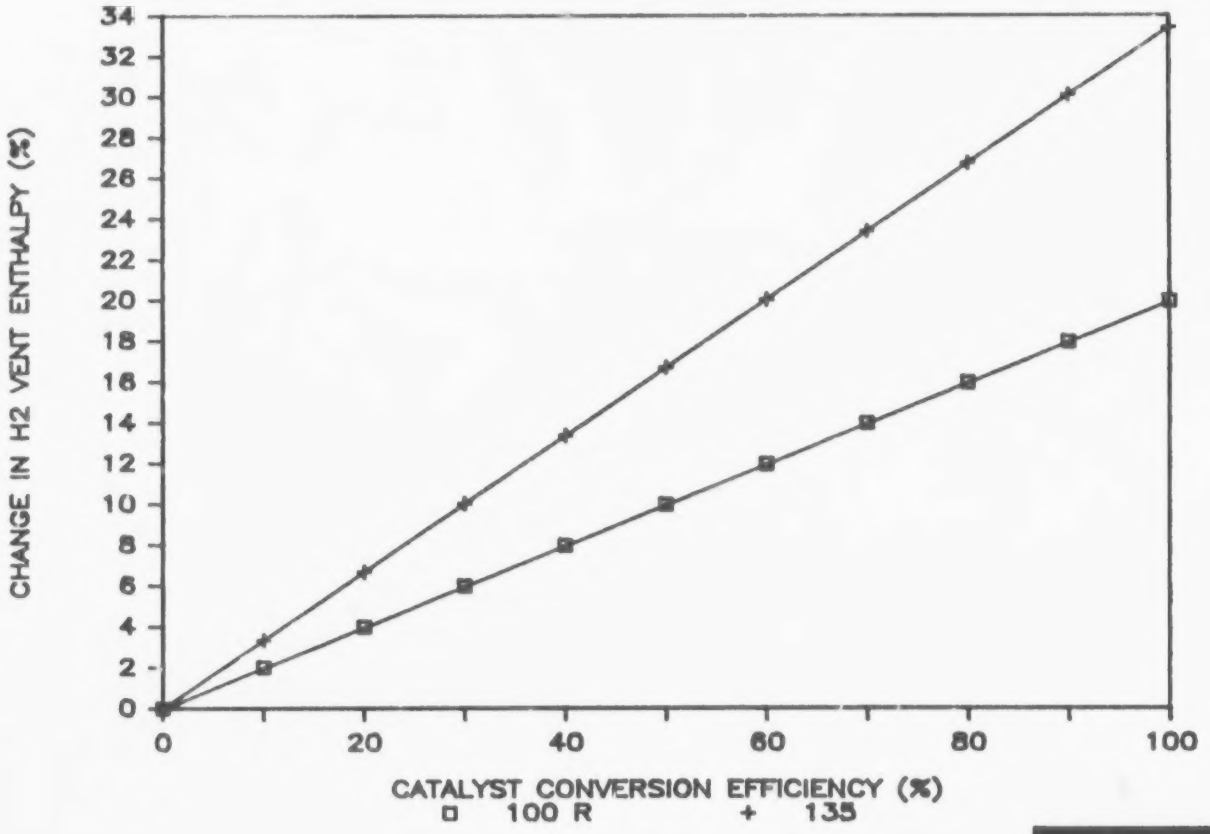

MARTIN MARIETTA

8.1.1 CRYOGENIC PROPELLANT STORAGE - TANK FARM SIZING 8 FT SPHERICAL

The Space Station truss work can be used to protect the storage tanks. However, this requires 26-8 ft LH_2 tanks and 10-8 ft LO_2 tanks. There is a large increase in boiloff due to more surface area, more supports and pipe penetrations. Assumed in the analysis was a 40% reduction in boiloff from the LH_2 VCS, detachable S-glass epoxy struts, high performance MLI, and a 10% reduction in H_2 boiloff from a para to ortho converter on the H_2 VCS. The coupled LO_2 VCS and tank heat exchanger could also use a para to ortho converter but as shown the minimum vent rate is more than adequate to keep the LO_2 tank in a no-vent storage condition. 196,000 lb of propellant at a mixture ratio of 6:1 is available after 30 days.

TANK FARM SIZING 8 FT SPHERICAL

LH2/LO2 STORAGE TANK COUPLED VCS

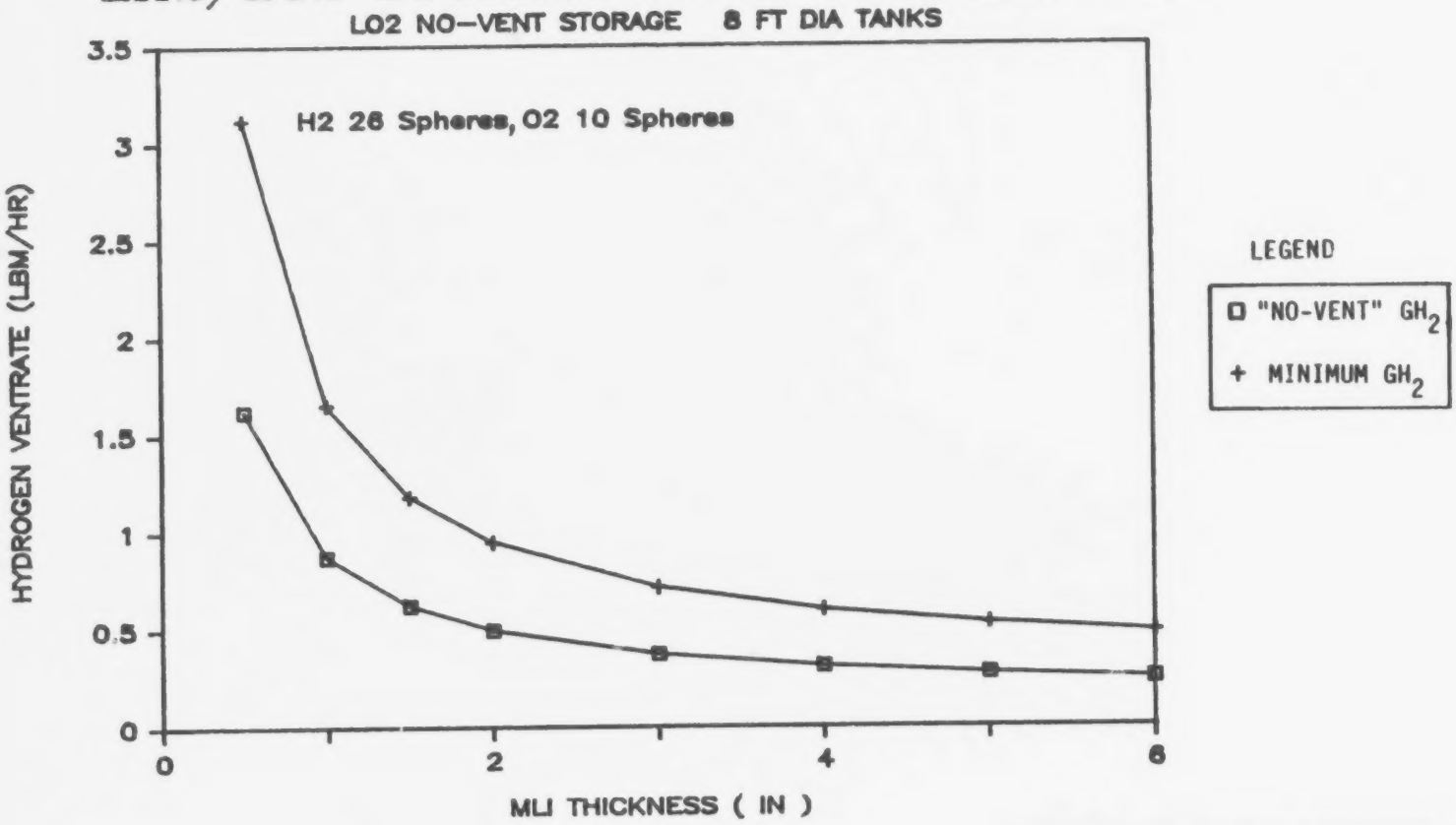

MARTIN MARIETTA

8.1.1 CRYOGENIC PROPELLANT STORAGE - TANK FARM SIZING 13.5 FT SPHERICAL

A symmetrical tank arrangement was investigated that used 13.5 ft spherical tanks for both LH_2 and LO_2. 28,000 lbm of hydrogen is stored in 6 tanks using high performance MLI detachable S-gloss epoxy struts, a VCS, and a para to ortho converter. A surface temperature of 412° R was assumed. The minimum expected GH_2 is sufficient to "no vent" store the LO_2 tank using a coupled VCS. The LO_2 tank also has detachable S-gloss epoxy struts, and high performance MLI. The concerns with this coupled VCS is the parasitic heat loads to both propellants because of the increased plumbing and long distance between tanks. 20% of the available heat capacity of the GH_2 vapor was assumed to be lost due to these heat loads.

Practical concerns with a coupled VCS or even a TVS/VCS is hydrogen leakage in the MLI. MLI performance is seriously degraded with increased interstitial pressure between its radiation shields. A 1×10^{-5} torr interstitial pressure with GN_2 as the residual gas was assumed. However, GHe or foam will be required if the tanks are launched full. Increasing the pressure to 1×10^{-4} torr from leakage or outgassing will increase the heat transfer by about 33%.

TANK FARM SIZING 13.5 FT SPHERICAL

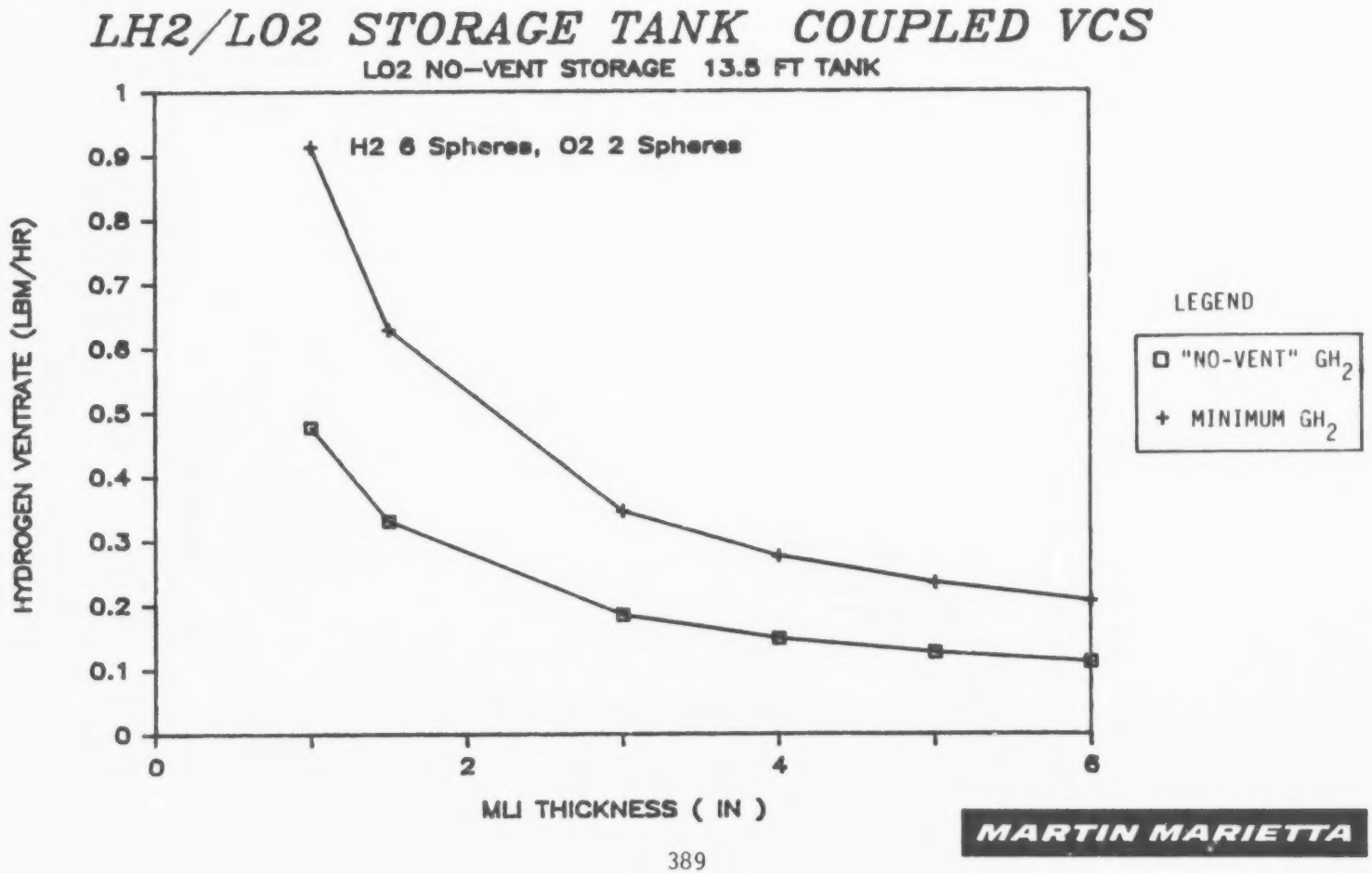

8.1.1 CYROGENIC PROPELLANT STORAGE - TANK FARM SIZING 13.5 FT CYLINDRICAL

To reduce the total surface area while staying within the shuttle cargo bay envelope, two 13.5 ft cylindrical tanks with hemispherical heads were sized for H_2 storage. Assumed in the design were: S-glass epoxy detachable struts, a coupled VCS, and a para to ortho converter (vented system). 28,000 lbm of H_2 and 168,000 lbm of O_2 is available after 30 days. A factor of 10% was assumed to allow for ullage and nonusable.

The figure shows the minimum expected LH_2 boiloff rate and the GH_2 flowrate required to totally refrigerate the LO_2 tank. The GH_2 was assumed to enter the LO_2 tank heat exchanger at 140° R and exit the VCS on the LO_2 tank at 220° R with 80% of its enthalapy change available to intercept heat.

TANK FARM SIZING 13.5 FT CYLINDRICAL

LH2/LO2 STORAGE TANK COUPLED VCS

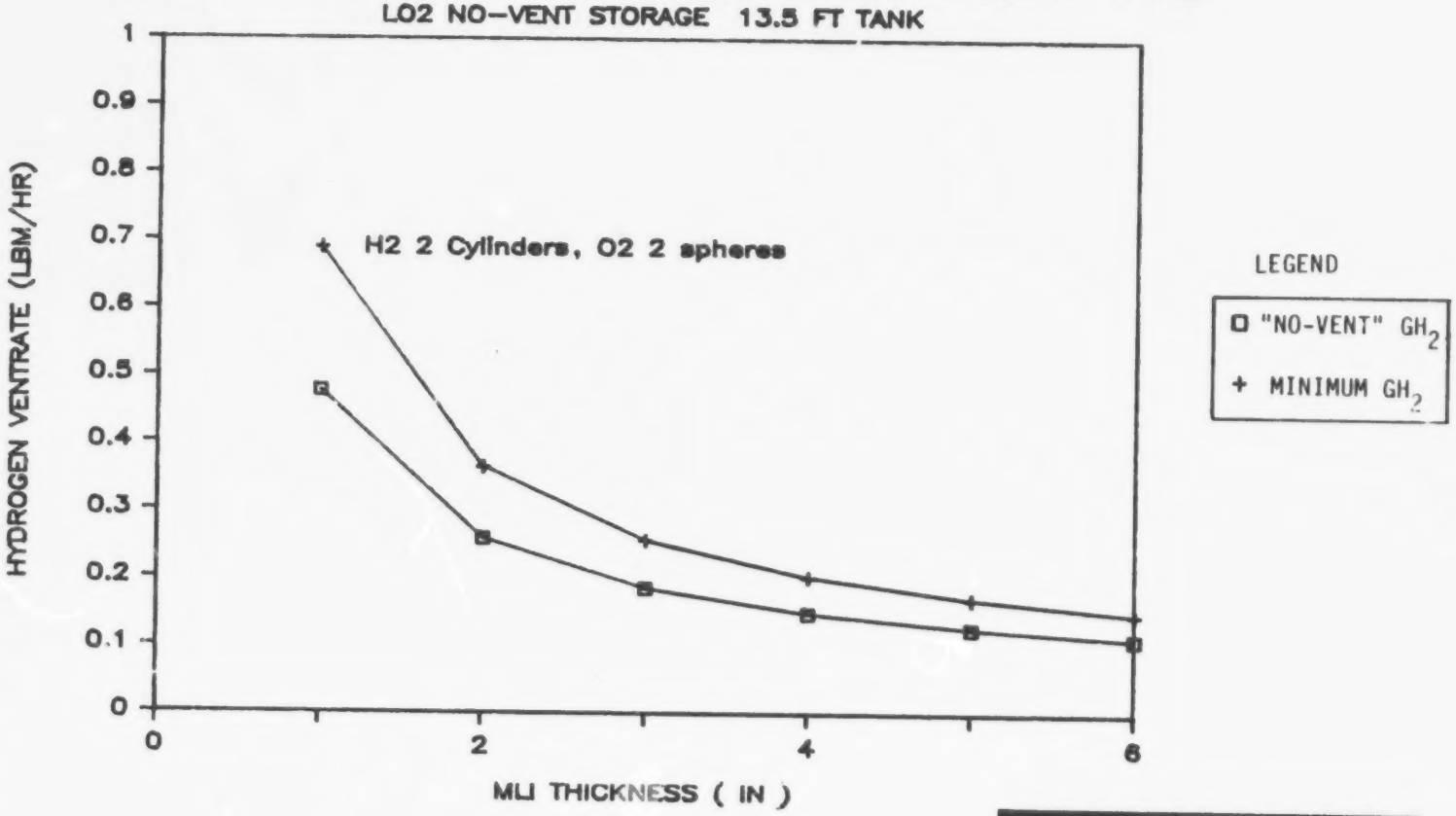

MARTIN MARIETTA

8.1.1 CRYOGENIC PROPELLANT STORAGE - REFRIGERATOR POWER VS BOILOFF

Refrigerator power is a function of the load temperature and the cooling load. The figure shows the power requirement to reliquify GH_2 boiloff from a coupled VCS with an outlet temperature of 220° R with a 2 stage reversed Brayton turbo-refrigerator. Also shown is the power required to reliquify the GH_2 boiloff from a thermodynamic vent without a VCS in the MLI. The higher power required for the first case is offset by the fact that a VCS has the potential to reduce the LH_2 boiloff by 40 to 50%. The coupled VCS eliminates the LO_2 refrigeration or reliquefaction system and reduces the LH_2 boiloff resulting in about the same total power for both cases. Other options for the LH_2 tank besides reliquefaction and venting are to refrigerate the tank VCS at a temperature above 36° R reducing the power and using the boiloff in the facility for propulsion, etc.

REFRIGERATOR POWER VS BOIL-OFF

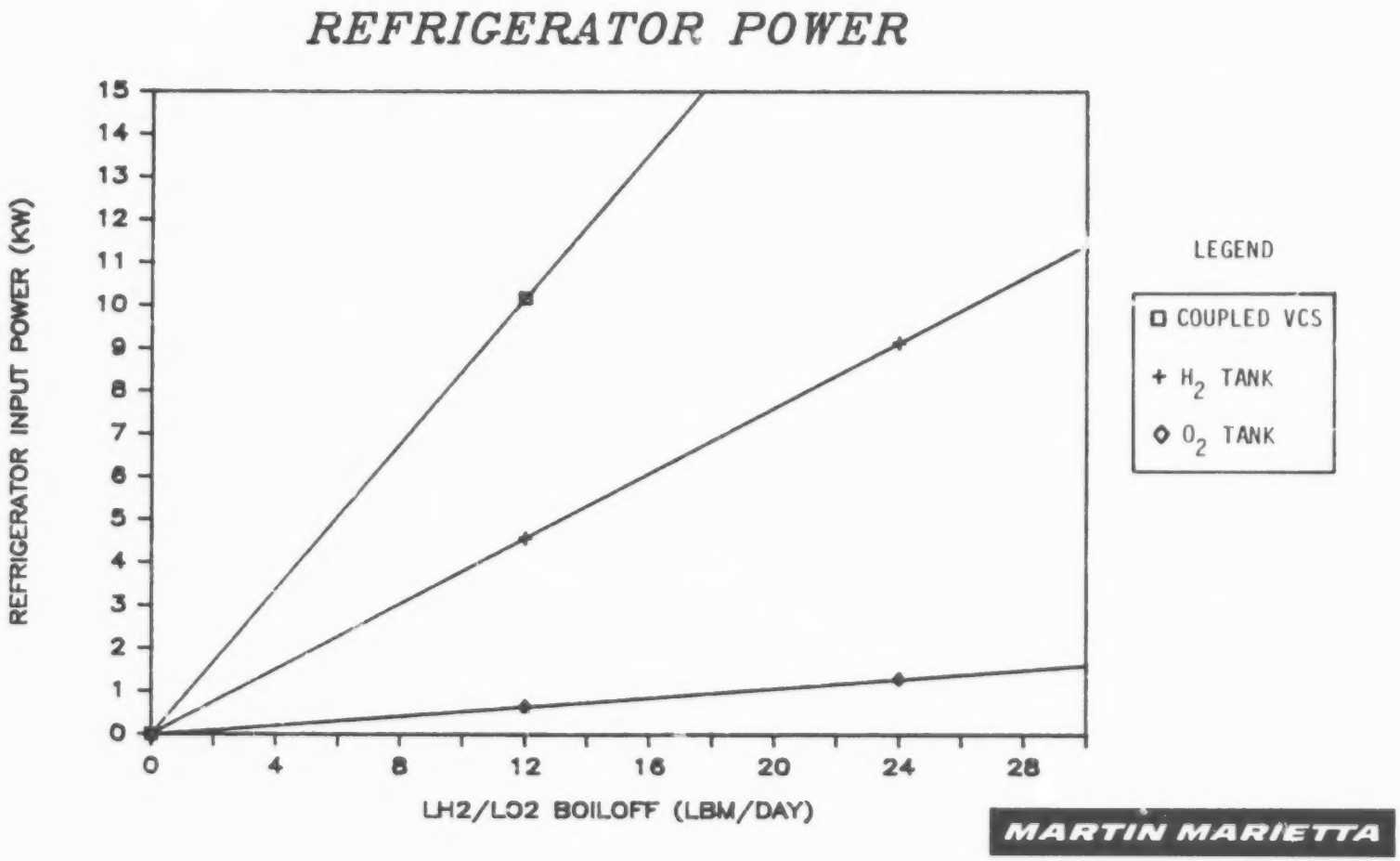

MARTIN MARIETTA

8.1.1 CRYOGENIC PROPELLANT STORAGE - STORAGE TEMPERATURE SENSITIVITY TO ALTITUDE, SOLAR ABSORPTION

The variation of average MLI surface temperature as a function of altitude is shown for solar absorptivities of 0.1 and 0.2 and a constant emissivity of 0.8. Based on these curves, a conservative surface temperature of 400 degrees R (222° K) was chosen for the cryogenic fuel facility tanks.

Ref: Long Term Cryogenic Storage Study Interim Report, December 1982, Martin Marietta Denver Aerospace MCR-82 588, pg. 93.

TEMPERATURE SENSITIVITY TO ALTITUDE, SOLAR ABSORPTION

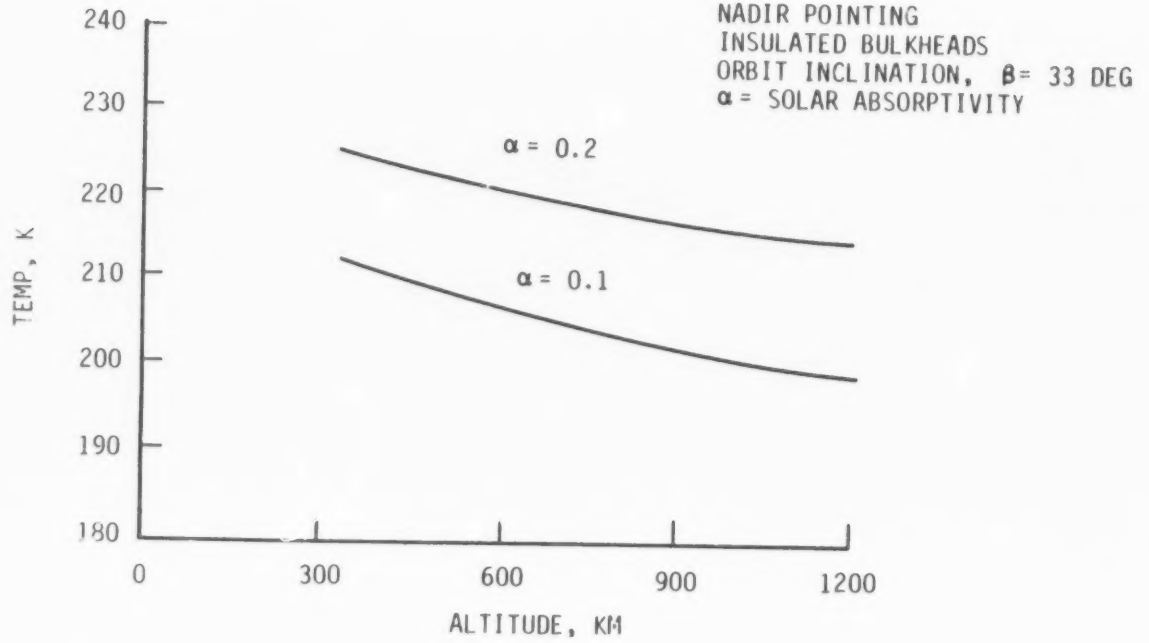

MARTIN MARIETTA

8.1.2 STORABLE PROPELLANT STORAGE - PROPELLANT FARM ANALYSIS

The storable propellant tank farm was defined to load an OTV in 4 hours or to empty a tanker in 4 hours. All displaced helium from transfer operations is captured and cleansed of propellant vapors in a cold-wall scrubber prior to repressurization for further use. The tank farm features vane tanks for low-g fluid management and pressure pumping of propellants by helium pressurant. The OTV is no-vent filled by first pumping the OTV to low pressure ($\leq$0.5 psia) and then backfilling with propellant.

All transfer lines in the storage tank farm are normally purged with helium except for transfer operations to reduce heating requirements. Prior to transfer fill, the lines are heated to operating temperature and the gas is driven out with propellant to be recovered in the scrubber system.

STORABLE PROPELLANT FARM ANALYSIS

- **STORABLE TANK FARM DEFINED**
  - PRESSURE-PUMPED PROPELLANT (HELIUM)
  - NO-VENT FILLED OTV
  - COLD-WALL SCRUBBER TO REDUCE PROPELLANT VAPOR IN HELIUM
  - LOW-G FLUID MANAGEMENT (VANE TANKS)
- **TANKER PROPELLANT TRANSFER BY TANK FARM HELIUM AND OTV DETANKING BY OTV HELIUM**
- **HEATERS ON ALL TANKS AND LINES**
- **TANK FARM FILL LINES NORMALLY PURGED EXCEPT FOR TRANSFER OPERATIONS**
- **OTV IS PUMPED DOWN TO LOW PRESSURE PRIOR TO FILL**
- **STORAGE SYSTEM SIZED TO RECEIVE *50K POUNDS OF PROPELLANT EVERY 4 HOURS***

8.1.2 STORABLE PROPELLANT STORAGE - MMH/N_2O_4 PROPELLANT SCRUBBER SYSTEM

The propellant facility scrubber system provides an attractive alternative to accumulating and disposing of GHe-propellant vapor mixtures. Gas mixtures come from OTV or fuel facility tanks or transfer lines during the evacuation procedure prior to propellant transfer. The system permits the reuse of pressurization GHe and the recovered propellants which would otherwise be discarded. The main disadvantage of the system is that separate pressurization systems are required for the two propellants since the scrubber systems do not remove all of the propellant vapor from the gas mixture. Two scrubber systems are required; one for each propellant. Also, more heat radiators and heat pipes are required to reject additional heat. The system uses a piston type vacuum pump at the front end to evacuate the desired vessel. Flow is then compressed in a diaphragm-type compressor and passed over a cold plate to condense out the propellant vapor. The heat of vaporization is removed with a 1 mW-in heat pipe and the liquid is drawncff with a liquid-gas separator. The cold plate is maintained at a temperature slightly above the propellant's triple point temperature to ensure maximum condensation. The scrubbed vapor then passes through a heat exchanger to lower the gas temperature prior to the next compression stage. Subsequent compression-cooling stages boost the gas pressure to 2000 psi before the gas is transferred to a high pressure storage bottle.

MMH/N2O4 PROPELLANT SCRUBBER SYSTEM

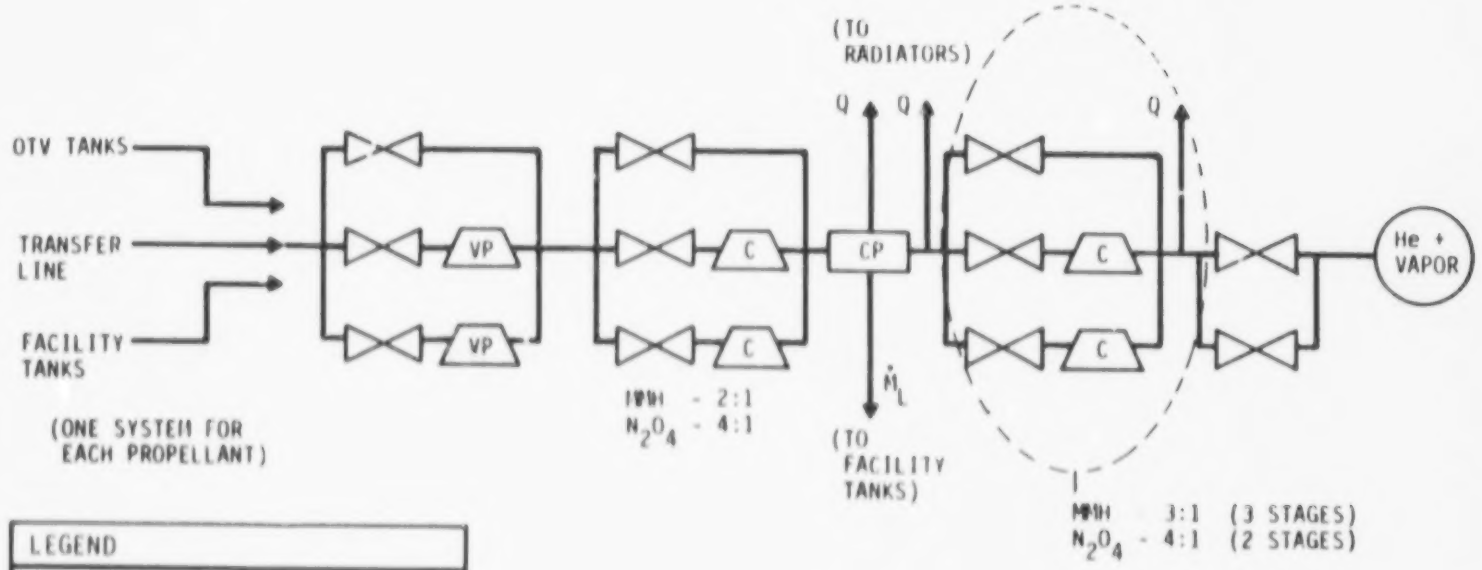

LEGEND	
VP	VACUUM PUMP
C	COMPRESSOR
CP	COLDPLATE
	VALVE

MARTIN MARIETTA

8.1.2 STORABLE PROPELLANT STORAGE - COMPRESSION TEMPERATURE VS PRESSURE

The compression of the GHe-vapor mixtures is constrained to operate above the vapor freezing temperatures. The GHe-MMH mixture compression is further constrained to operate below the auto-ignition temperature, 842° R. The GHe-MMH compression uses one 2:1 and 3:1 intercooled compression stages to boost the mixture to the final pressure while providing more than 100° R margin below the auto-ignition temperature. The GHe-N_2O_4 compression uses three 4:1 intercooled compression stages. All temperatures were calculated using positive displacement compressors with 80% isentropic efficiencies.

COMPRESSION TEMPERATURE VS PRESSURE

GHe - MMH COMPRESSION

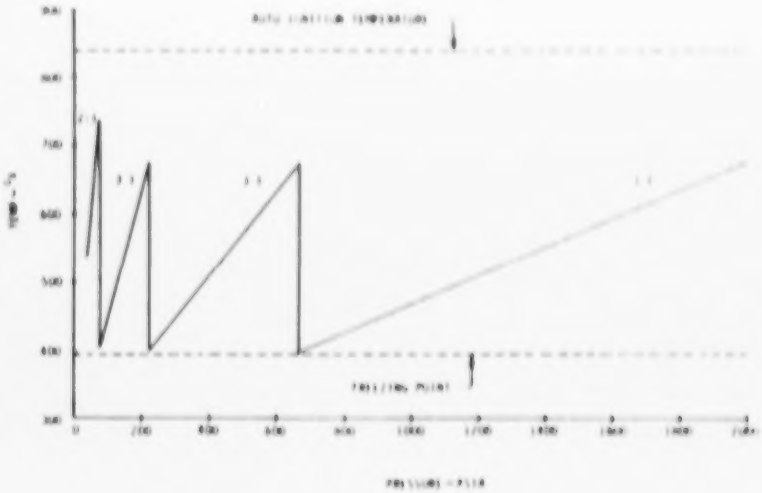

GHe - N_2O_4 COMPRESSION

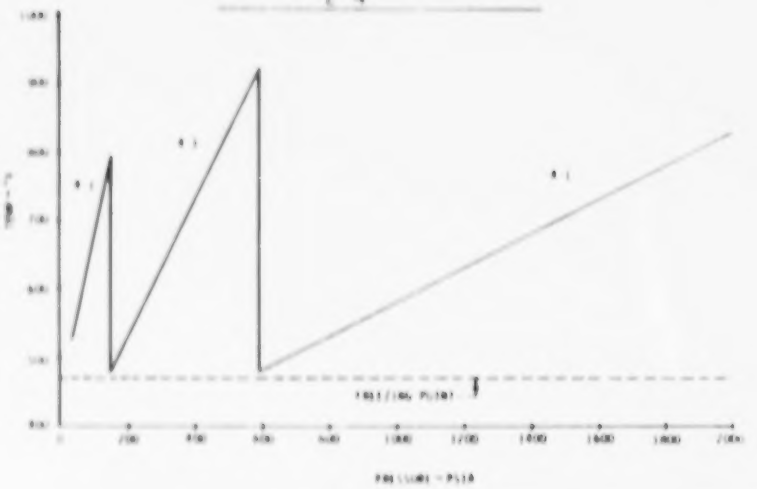

MARTIN MARIETTA

8.1.2 STORABLE PROPELLANT STORAGE - THERMAL CONTROL HEATER REQUIREMENTS

The propellant tank heater requirements were calculated for various sink temperatures. The tanks were assumed to be in thermal equilibrium at a temperature just above the respective propellants freezing temperature. The curves show that a 200° R sink temperature produces nearly the maximum heater requirements and was therefore chosen as a conservative sink temperature.

STORABLE THERMAL CONTROL HEATER REQUIREMENTS

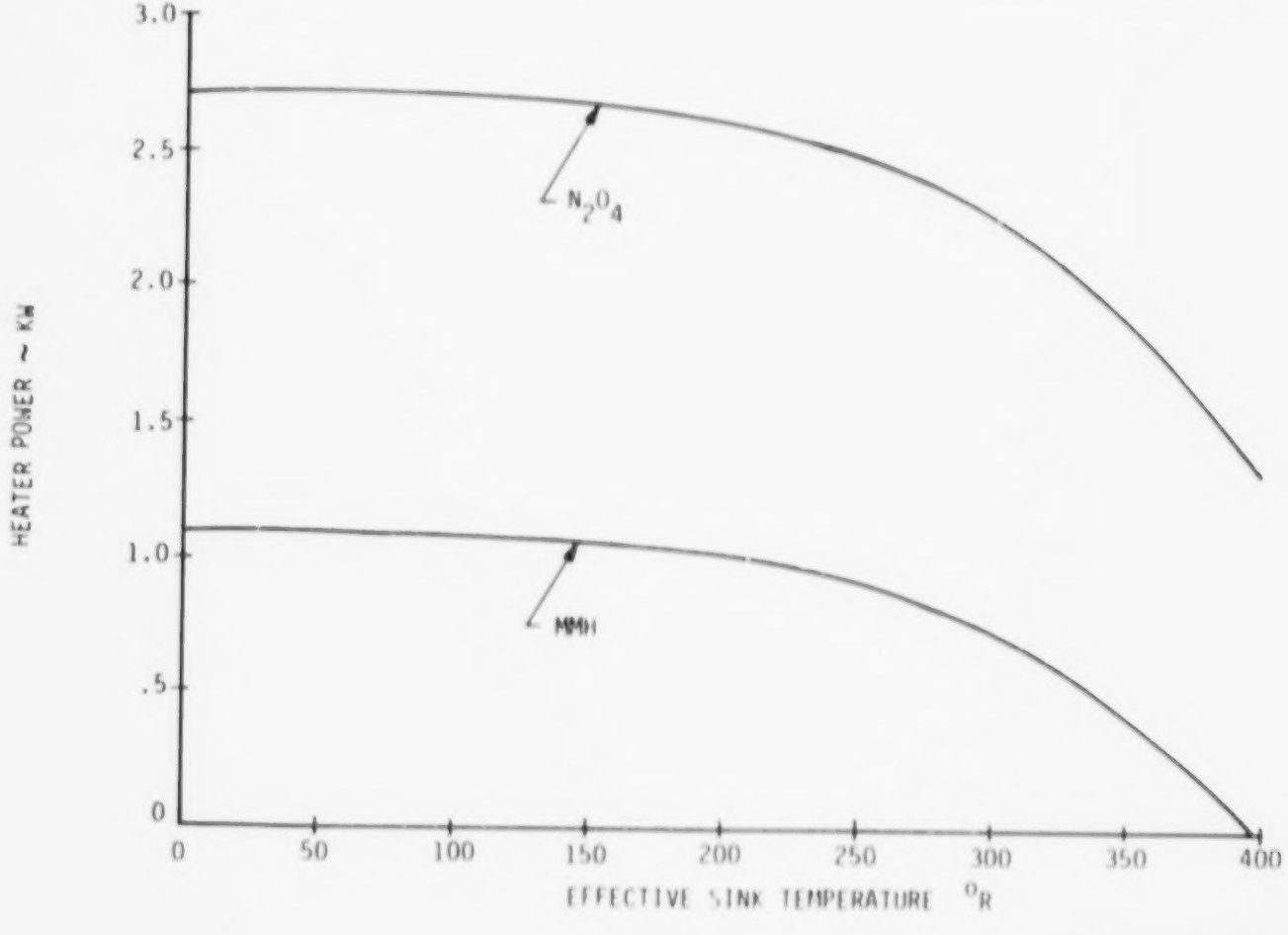

MARTIN MARIETTA

8.1.2 STORABLE PROPELLANT STORAGE - POWER REQUIREMENTS

The storable propellant facility requires power to heat tanks and transfer lines, drive pumps and compressors, and operate valves and electronics. Peak power values are presented. Total power requirements will be assessed when time lines are developed. The tank heater power requirement was calculated by assuming that heaters would be used to prevent the propellants from freezing. This power was calculated by performing a steady state energy balance on the facility propellant tanks whose temperatures were just above the freezing temperature of the particular propellant. Under these conditions, the required heater power to the tanks equaled the heat transfer from the tanks. Heat transfer from the tanks was calculated by assuming that the tanks were insulated with a few layers of MLI, .05 emissivity, and that the only mode of heat transfer was radiation to a 200° R sink. Also, it was assumed that the tanks did not see each other or the facilities. The 10 N_2O_4 tanks required 2.6 KW and the 8 MMH tanks required 1.0 KW to balance the radiation heat transfer from the tanks. These results are conservative since the tanks will be clustered and the sink temperature is probably much higher than 200° R. The transfer lines require heaters because the lines will be purged of liquid following transfer and may cool to some equilibrium temperature below the propellant freezing temperature. The heater 5.3 KW power was calculated by assuming the lines weigh 650 lbm, are made of stainless steel with C_p = .11 BTU/lbm° R, the desired temperature rise is 250° R, and the heatup must occur in 1 hour. The scrubber system pump and compressor power estimate assumed a worst case scenario of the maximum storable configuration, one 97 klbm and one 51 klbm stage, to be evacuated in 12 hours. The OTV tanks were assumed to be dry, at 37 psi and 537° R, and to be saturated with propellant vapor. Isentropic pump efficiencies of 80% were used, and the total power was 2.8 KW. An allowance of 1 KW as made for electronics, values, and margin.

STORABLE POWER REQUIREMENTS

SYSTEM	REQUIRED POWER	COMMENTS
TANK HEATERS	3 6 KW	MAINTAIN PROPELLANTS ABOVE FREEZING TEMPERATURE SINK TEMPERATURE = 200° R MLI EMISSIVITY = 05
TRANSFER LINE HEATERS	5 3 KW	THERMALLY CONDITION TRANSFER LINES TIME REQUIRED = 1 HOUR T = 250° R LINE MASSES = 650 LBM (STAINLESS STEEL)
SCRUBBER SYSTEM PUMPS & COMPRESSORS	2 8 KW	PUMP & COMPRESS HELIUM & VAPOR MIXTURE PUMP DOWN 97K & 51K STAGES IN 12 HOURS ISENTROPIC EFFICIENCY = 80%
MISCELLANEOUS	1 0 KW	ELECTRONICS, VALVES, MARGIN
TOTAL (*PEAK*)	***12.7 KW***	

MARTIN MARIETTA

8.1.2 STORABLE PROPELLANT STORAGE - THERMAL CONTROL/HEAT PIPE PERFORMANCE

Current and expected performance are shown for capillary pumped loop heat pipes using Freon-11 and ammonia as the working fluid. These fluids are appropriate for thermal energy transport in the storable propellant temperature range.

Ref: OAO Corporation, Long-Term Cryogenic Storage Technology Conference, May 12-13, 1982.

STORABLE THERMAL CONTROL-HEAT PIPE PERFORMANCE

	UNITS	FREON-11@25°C	AMMONIA @20°C
PROOF-OF-CONCEPT PROTOTYPE			
o HEAT TRANSPORT CAPACITY	KW-METER	4	34
	MW-INCH	0.16	1 3
o EVAPORATOR FILM COEFFICIENT	BTU/HR-FT²-°F	250-500	4000-8000
AUGMENTED PROTOTYPE DESIGN			
o HEAT TRANSPORT CAPACITY	KW-METER	24	204
	MW-INCH	0.94	8
EXTRAPOLATED SPACE STATION DESIGN			
o HEAT TRANSPORT CAPACITY	KW-METER		2,000-14,000
	MW-INCH		80-550

8.1.3 PROPELLANT STORAGE SUPPORTING DATA - LOW-G FLUID MANAGEMENT

The requirements for propellant orientation in the initial storage concept trade study required gravity and capillary forces (Bond number) such that a gravity component of at least 10^{-5} G's was necessary to ensure liquid settling. Constraints on Space Station operation of 10^{-5} G's or less caused low bond numbers and required an alternate approach to ensure tank outlet coverage during propellant transfer.

The analysis of the free flyer storage tank farm also resulted in the selection of vent tanks. Gravity gradient forces, sufficient to meet fuel settling requirements, required the location of the propellant mass at least 300 feet from the free flyer center of mass. This location dictated a free flyer 900 feet long and was not considered viable. (The dry weight of the free flyer storage farm was assumed to be 100,000 pounds.)

LOW-G FLUID MANAGEMENT

- SPACE STATION CONSTRAINTS REQUIRE LOW-G FLUID MANAGEMENT
- FREE FLYER TANK FARM ALSO REQUIRES LOW-G FLUID MANAGEMENT
- SELECTED VANE TANKS
  - *DEMONSTRATED IN VIKING*
  - *ANALYSIS INDICATES SUCCESSFUL APPLICATION TO CRYOS*
- ESTIMATED WEIGHT IMPACTS (8.0 FEET DIA TANKS):
  - LH_2 - ***40 LBM***
  - LO_2 - ***80 LBM***
  - MMH - ***80 LBM***
  - N_2O_4 - ***120 LBM***
- TOTAL WEIGHT IMPACTS:
  - 26 LH_2 TANKS = 1040
  - 10 LO_2 TANKS = 800
    1840 LBM
  - 8 MMH TANKS = 640
  - 10 N_2O_4 TANKS = 1200
    1840 LBM

8.1.3 PROPELLANT STORAGE SUPPORTING DATA - VANE TANK SELECTION

The vane tanks selected for low-g fluid management are used for both LH_2/LO_2 and storable propellant transfer. The vanes add weight to each tank and can lose the liquid under high-g forces. The loss of liquid can also occur if the cryogens boil, which can be controlled with the TVS/VCS.

VANE TANK SELECTION

- VANE TYPE SURFACE TENSION DEVICE FOR STORAGE TANKS SELECTED DUE TO LOW ACCELERATION LEVELS ON SPACE STATION (10^{-5} g or less) AND LOW TANK BOND NUMBERS (< 10)
- VANE TANKS ORIENTED TO TAKE ADVANTAGE OF DRAG FORCES
- VANE TANKS SELECTED FOR BOTH CRYO AND STORABLE FUELS

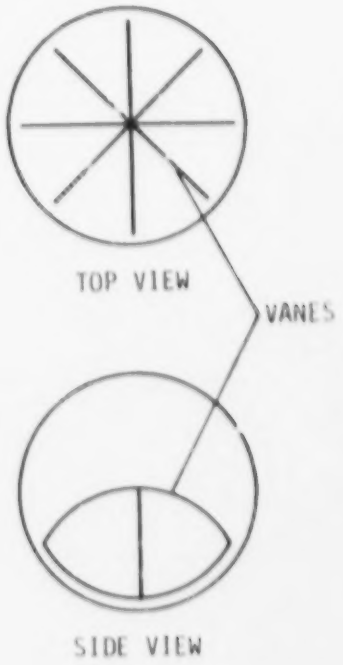

ADVANTAGES	DISADVANTAGES
• CAPILLARY FORCES WILL POSITION ULLAGE BUBBLE • WILL ALLOW 4 HOUR TRANSFER TIME FOR OTV LOADING • VANE DEVICE IS LIGHTWEIGHT (40-80 POUNDS FOR 8.0 DIA. TANK) AND IS COMPLETELY PASSIVE	• DEVICE CAN LOSE LIQUID DURING HIGH-G FORCES (i.e., REBOOST) BUT SHOULD RECOVER IN SEVERAL HOURS • BOILING OF CRYOGENS COULD CAUSE LOSS OF LIQUID ACQUISITION • TANK FILLING AND MIXING IS COMPLICATED BY PRESENCE OF VANES

8.1.3 PROPELLANT STORAGE SUPPORTING DATA - BOND NUMBER VS TANK RADIUS

The bond number is a ratio of body to surface forces. Several studies have shown that the bond number must be greater than 10 to settle propellants in low G environments and greater than 50 to ensure a flat interface. Bond numbers were calculated for different propellants and accelerations as functions of tank radius, and the results are shown in the accompanying figure. The figure shows, for tanks capable of fitting in the STS cargo bay, that propellants will be settled if the acceleration is greater than 10^{-5} Gs. More acceleration may be desirable to provide settling margin.

BOND NUMBER VS TANK RADIUS

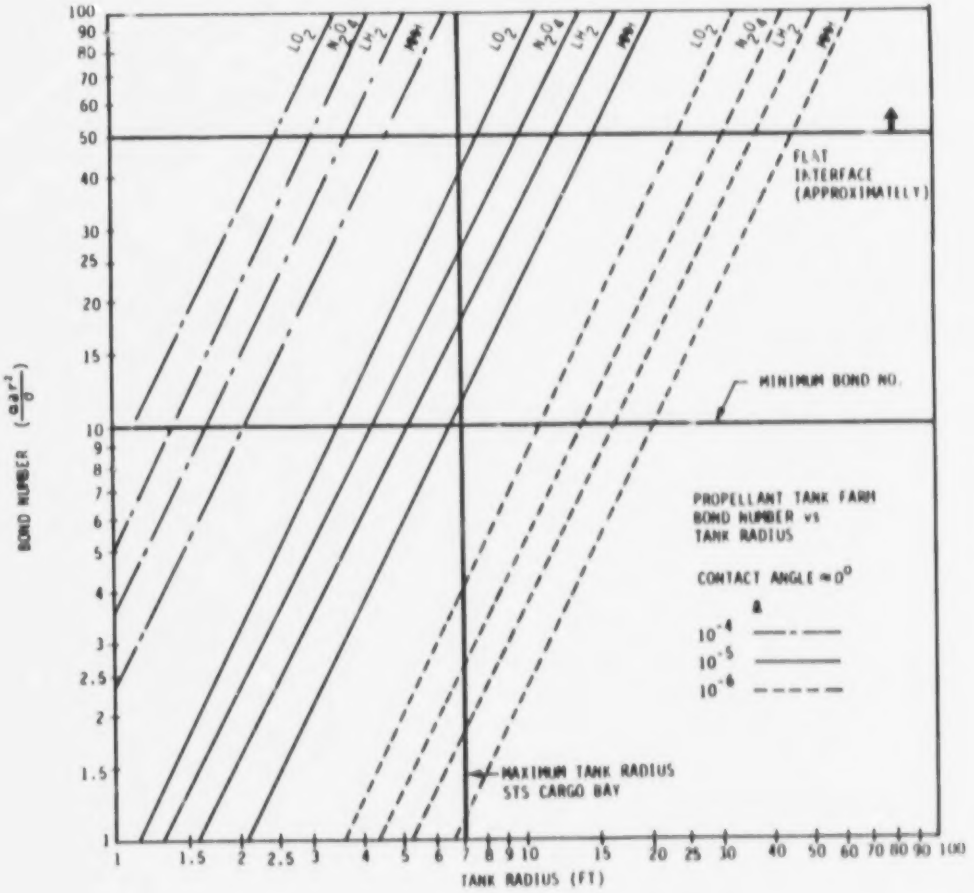

MARTIN MARIETTA

PRECEDING PAGE BLANK NOT FILMED

8.2 PROPELLANT TANK FARM LOCATION TRADE STUDIES

8.2.1 CRYOGENIC PROPELLANT TANK FARM LOCATIONS RESULTS

The cryogenic propellant tank farm was located on Space Station as a result of the trade analysis. Primarily, the redundant systems required, increased processing timelines, increased OMV demands, and the associated costs of the remote and tethered options made the Space Station location desirable. The Space Station location also centralized the OTV processing and refueling operations for better turnaround times and reduced the additional risks to the OTV and payload from rendezvous and docking operations with a remote or tethered refueling station. The specific evaluation and weighting factors, and the results for the cryogenic tank farm location are shown on the facing chart.

OTV PROPELLANT TANK FARM LOCATION RESULTS (LO2/LH2)

LO_2/LH_2

EVALUATION FACTOR & RATING FACTOR	WF	INSITU (ON SPACE STA.) RATING	INSITU (ON SPACE STA.) SCORE	TETHERED RATING	TETHERED SCORE	FREE FLYER RATING	FREE FLYER SCORE
COST	0.2	9	1.8	5	1.0	4	0.8
RELIABILITY/MAINT.	0.2	10	2.0	5	1.0	8	1.6
INDUCED GRAVITY	0.15	8	1.2	0	0	10	1.5
OMV	0.15	10	1.5	3	0.45	6	0.9
POWER	0.05	9	0.45	9	0.45	6	0.3
U/T REMOTE REBOOST PROP.	0.05	10	0.5	10	0.5	2	0.1
S/S REBOOST PROPL	0.05	4	0.2	3	0.15	10	0.5
MASS	0.05	8	0.4	4	0.2	6	0.3
OPERATIONS	0.10	10	1.0	2	0.2	5	0.5
TOTALS			9.05		3.95		6.50

0 (POOR) - 10 (GOOD)

8.2.2 STORABLE PROPELLANT TANK FARM LOCATION RESULTS

The results of the storable propellant tank farm location trade are shown on the facing chart. Of interest, the evaluation and weighting factors used for the cryo and storable tank farm trades are the same, with the resulting conclusion that the cryo farm ranks higher than the storable farm.

OTV PROPELLANT TANK FARM LOCATION RESULTS (STORABLE)

STORABLE

EVALUATION FACTOR & RATING FACTOR	WF	INSITU (ON SPACE STA.)		TETHERED		FREE FLYER	
		RATING	SCORE	RATING	SCORE	RATING	SCORE
COST	0.2	8	1.6	4	0.8	2	0.4
RELIABILITY/MAINT.	0.2	10	2.0	5	1.0	8	1.6
INDUCED GRAVITY	0.15	8	1.2	0	0	10	1.5
OMV	0.15	10	1.5	1	0.15	5	0.75
POWER	0.05	9	0.45	9	0.45	5	0.25
U/T REMOTE REBOOST PROP.	0.05	10	0.5	10	0.5	0	0
S/S REBOOST PROP.	0.05	3	0.15	2	0.1	10	0.5
MASS	0.05	6	0.3	2	0.1	4	0.2
OPERATIONS	0.10	10	1.0	2	0.2	5	0.5
TOTALS		8.70		3.30		5.70	

0 (POOR) - 10 (GOOD)

MARTIN MARIETTA

8.2.3 PROPELLANT TANK FARM LOCATION SUPPORTING DATA - FREE FLYER PROPELLANT STORAGE FARM

A concept for a free flyer storage farm was developed for the location trades, as shown on the facing chart. A prime problem with remote fuel farm "station keeping" is maintaining position without the excessive use of fuel. This concept utilizes drag sails that are adjustable for controlling the ballistic coefficient, B. During standby operations the free flyer monitors Space Station position and adjusts sail angle to match orbital decay. During docking operations, the free flyer adjusts the drag to compensate for the rapid mass changes of fueling and refueling operations.

The free flyer platform provides its own power, propulsion, avionics, attitude control and thermal radiators. An MRMS is also required to berth the OMV/OTV/payload. Fueling and refueling operations are automated and require no crew time to complete operations after initial docking operations. An rf link to Space Station provides telemetry for monitoring critical operations.

FREE FLYER PROPELLANT STORAGE FARM

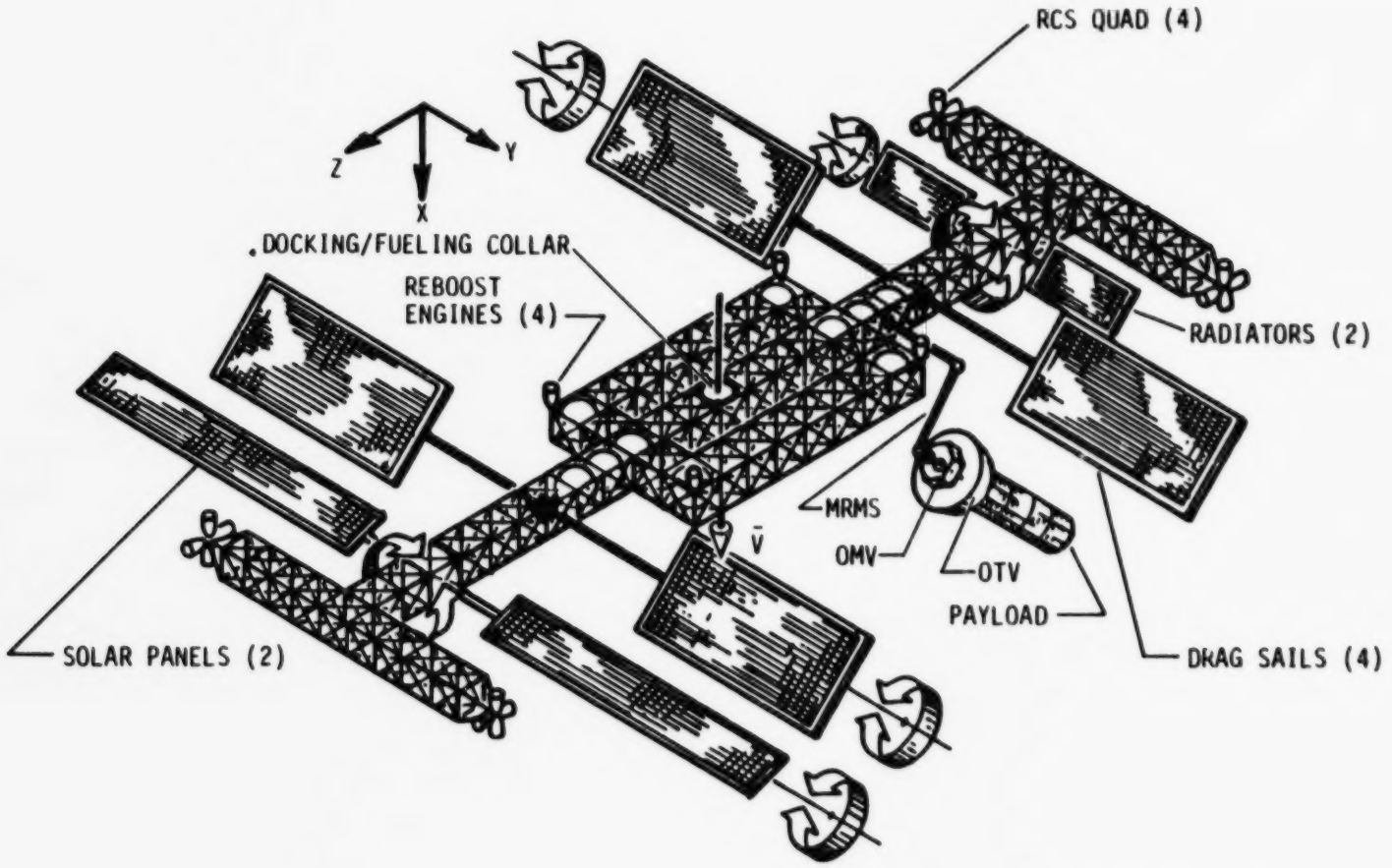

MARTIN MARIETTA

8.2.3 PROPELLANT TANK FARM LOCATION SUPPORTING DATA - OTV ORBITAL MANEUVERS: TRANSFER TO FREE FLYER TANK FARM

The movement of the OTV/payload from the processing hangar to the free flyer tank farm with the OMV is shown on the facing page. The OMV is mated to the OTV/payload prior to deployment from the Space Station. The stacked assembly of the OMV/OTV/payload is accelerated retrograde from the Space Station with sufficient velocity (~1 fps) to pass under the Space Station at a safe distance. At about 1800 seconds, the OMV/OTV/payload has moved outside control zone 1 (1KM), allowing the OMV to initiate a bipropellant burn for an additional retrograde velocity of 8 fps. A later posigrade burn accelerates the vehicle towards the tank farm altitude to a position about 18 - 20 nm in front of Space Station. A final OMV burn stabilizes the vehicle on the velocity vector of the tank farm, ready for rendezvous maneuvers.

OTV ORBITAL MANEUVERS: TRANSFER TO FREE FLYER TANK FARM

TRANSFER TO REMOTE TANK FARM

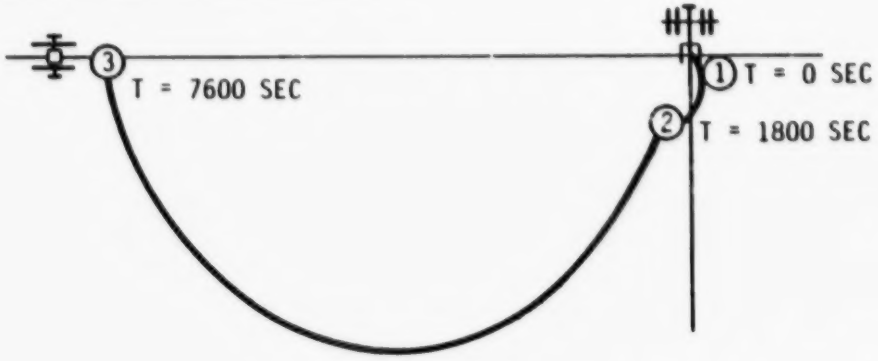

① OTV/OMV SEPARATES FROM SPACE STATION: INITIAL VELOCITY 1 FPS RETRO

② 30 MIN AFTER SEPARATION, OTV/OMV INITIATES 7 FPS RETRO BURN, APPROXIMATELY 3300 FT. FROM SPACE STATION

③ APPROXIMATELY 127 MIN (1 1/3 ORBITS) AFTER SEPARATION, OTV/OMV INITIATES POSIGRADE BURN TO STABILIZE ON $\bar{V}$ FOR DOCKING MANEUVERS.

8.2.3 PROPELLANT TANK FARM LOCATION SUPPORTING DATA - SPACE STATION/TETHER CONFIGURATION

To support the storage location trades, a Tethered Orbital Refueling Facility (TORF) concept was developed as shown. Optimal tether lengths (to the center of mass) to provide fuel settling with high bond numbers are on the order of 3000 feet. The chart shows the TORF tethered below the Space Station, but, as shown on the next chart, both above and below configurations were considered.

SPACE STATION/TETHER CONFIGURATION

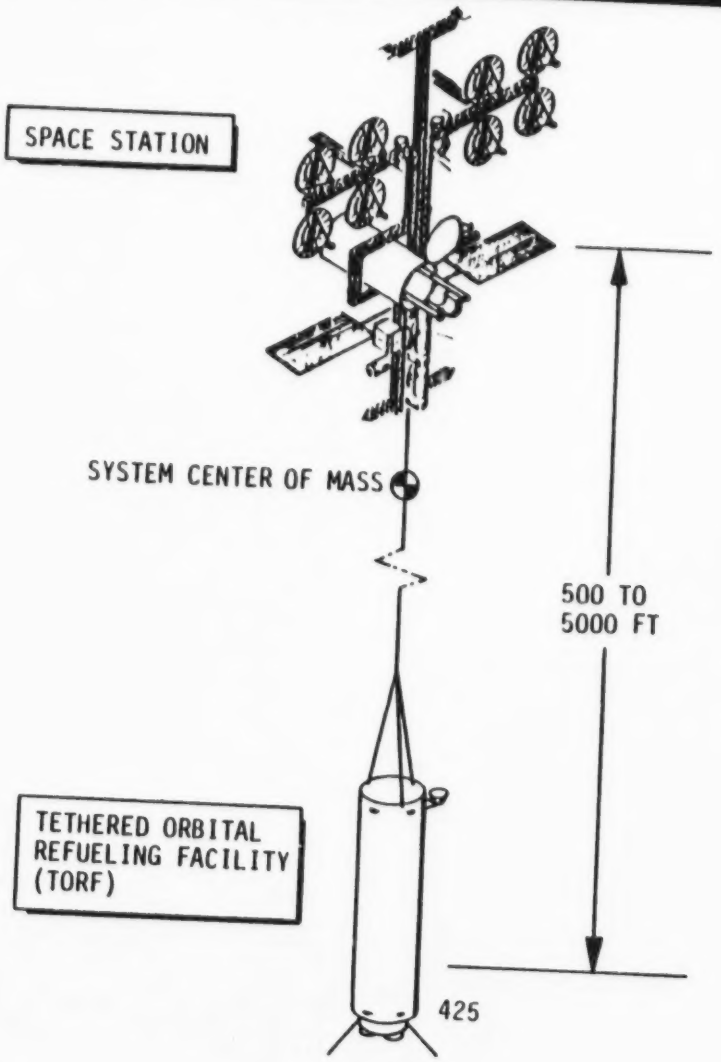

MARTIN MARIETTA

8.2.3 PROPELLANT TANK FARM LOCATION SUPPORTING DATA - OTV ORBITAL MANEUVERS: TRANSFER TO TETHERED ORBITAL REFUELING FACILITY (TORF)

The transfer of an OMV/OTV to the TORF for refueling requires a series of burns to place the vehicle in the proper position for rendezvous. A peculiarity of the tethered fueling station is that the apparent motion of the TORF does not match the altitude of the TORF. A rendezvous with the TORF requires the OMV/OTV to attain an elliptical orbit with either the apogee or perigee matching the orbital velocity of the TORF. An apogee rendezvous is used for a TORF below the Space Station and a perigee rendezvous for a TORF above the Space Station.

For both rendezvous maneuvers, a circular phasing orbit is utilized to position the OMV/OTV for the final rendezvous burn. If phasing is correct, the rendezvous can be completed in about 3 hours.

OTV ORBITAL MANEUVERS:
TRANSFER TO TETHERED ORBITAL REFUELING FACILITY (TORF)

TANK FARM TETHERED BELOW SPACE STATION

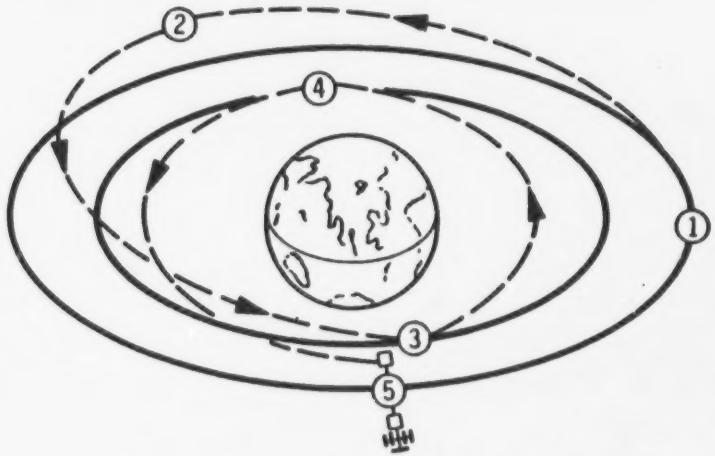

① OTV/OMV INITIATES POSIGRADE BURN TO MOVE ABOVE AND BEHIND SPACE STATION

② OTV/OMV PERFORMS LARGE RETRO BURN TO DROP PERIGEE BELOW TORF

③ OTV/OMV CIRCULARIZES PHASING ORBIT

④ WHEN PROPERLY PHASED WITH TORF, OTV/OMV PERFORMS BURN TO RAISE APOGEE TO TORF

⑤ OTV/OMV IS "CAPTURED" BY TORF

TANK FARM TETHERED ABOVE SPACE STATION

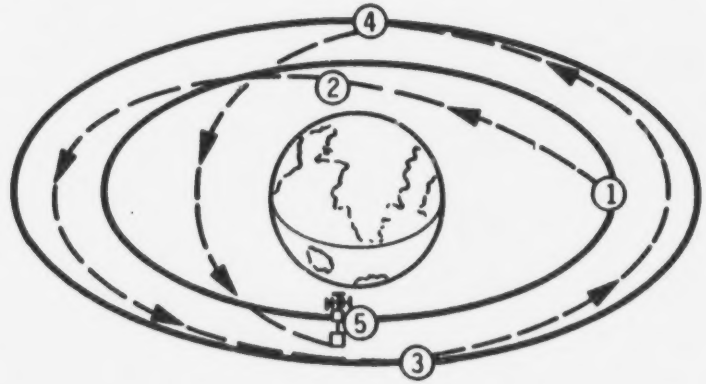

① OTV/OMV INITIATES RETROGRADE BURN TO MOVE BELOW AND AHEAD OF SPACE STATION

② OTV/OMV PERFORMS BURN TO RAISE APOGEE TO PHASING ORBIT

③ OTV/OMV CIRCULARIZES PHASING ORBIT

④ OTV/OMV PERFORMS RETROGRADE BURN, WHEN PROPERLY PHASED TO LOWER PERIGEE TO TORF

⑤ OTV/OMV IS "CAPTURED" BY TORF

MARTIN MARIETTA

8.3 MISCELLANEOUS ANALYSES

These analyses were performed during the conduct of Task 5, Space Station Accommodations Concept Definition. They were originally anticipated to be large scale investigations, but as requirements were driven out, the conclusions became obvious.

OTV/payload mating must be accomplished within the servicing and maintenance hangar so as to allow positive control of the long and large masses to protect the payload during possible long checkout periods and because there are no other volumes available on Space Station for this operation.

The hangar and berthing configuration is driven by: location - at or near the Space Station center-of-mass (recognize that the propellant tank farm must be near the hangar); the launch and retrieve mode - along the Space Station negative and positive velocity vectors; and storage considerations - near the servicing facility to minimize translation operations and timelines.

After determining the relative small watch crew available at Space Station to perform all of the functions, the ORU servicing requirements were limited to strictly removal and replacement operations, with any repair activities to be performed after the ORU has been returned to Earth.

MISCELLANEOUS ANALYSES

- OTV / PAYLOAD MATING CONSIDERATIONS AT SPACE STATION
  - *ACCOMPLISHED WITHIN SERVICING & MAINTENANCE HANGAR*
  - *NO OTHER VOLUMES AVAILABLE*
- ALTERNATIVE OTV HANGAR AND BERTHING CONFIGURATIONS
  - *AT/NEAR SPACE STATION CENTER-OF-MASS*
  - *LAUNCH & RETRIEVE OTV ALONG NEGATIVE & POSITIVE VELOCITY VECTORS*
  - *STORAGE CONSIDERATIONS*
- ORU STORAGE AT SPACE STATION
  - *CLOSE TO SERVICING FACILITY*
- ORU SERVICING AT SPACE STATION
  - *CREW & FACILITY LIMITATIONS*
  - *LIMITED TO REMOVE & REPLACE*
  - *NO ON-ORBIT REPAIR OPERATIONS*